MAHAGROUP

MA STAR 3.5 | 5.5 | 6.5

Two Post Lifts

Original Operating Instructions

BA364501-en

Installation | Operation | Service

BA364501-en
2022-09-30

Manufacturer

MAHA Maschinenbau Haldenwang GmbH & Co. KG
Hoyen 20
87490 Haldenwang
Germany

Phone: +49 8374 585-0
Fax: +49 8374 585-590
Mail: maha@maha.de
Web: www.maha.de

Service

MAHA SERVICE CENTER
Maybachstraße 8
87437 Kempten
Germany

Phone: +49 8374 585-100
Fax: +49 8374 585-491
Mail: service@maha.de
Web: www.mahaservicecenter.de

Dear Customer,

MAHA is one of the world's leading manufacturers of testing and lifting technology and places particular emphasis on quality and performance. The company's concept includes the development, manufacture and sale of products for use in automotive workshops, by vehicle manufacturers and testing organisations.

MAHA's claim is to also be a leader in the areas of reliability, safety and sustainability – this can be seen in many details that have been developed with these aspects in mind.

We are convinced that you will be more than satisfied with the quality and performance of our products for many years. With the purchase of our products you will also receive professional assistance in case of need for service and repair.

Please remember to keep these operating instructions in a safe place. Accurately following their contents will significantly extend the life of your product and also increase its resale value. If you sell your product, please also pass on the operating instructions.

MAHA is constantly working on the further development of all products and therefore reserves the right to make changes, e.g. in shape and appearance, without prior notice.

Extensive accessories, useful assembly material and auxiliary materials are available for our products. For further information, please ask your dealer or your MAHA contact person at any time.

Thank you for choosing a MAHA product!

Contents

1 General Safety Instructions

1.1 Introduction

- These operating instructions must be read carefully and understood before work commences.
- Please observe the specific safety information provided for the respective sections of the operating instructions.
- Adhering to the procedures, sequences and corresponding safety instructions is essential.
- A printed copy of the operating instructions must always be kept by the lift.
- The relevant regulations regarding accident prevention and health and safety must be observed.

1.2 Symbols and Signal Words

1.2.1 Personal Injury

DANGER

indicates an immediate hazard which, if not avoided, will result in death or severe personal injury.

WARNING

indicates a potential hazard which, if not avoided, could result in death or severe personal injury.

CAUTION

indicates a potential hazard which, if not avoided, could result in moderate or minor personal injury.

1.2.2 Property Damage

NOTICE

indicates a potentially harmful situation which, if not avoided, could result in damage to the equipment or surrounding objects.

1.3 What to Do in the Event of Defects or Malfunctions

- If a malfunction occurs, e.g. uncontrolled raising and lowering or in the case of load-bearing components of the structure becoming deformed, immediately lower the lift to the ground to its initial position or support the structure.
- Turn off the main switch and secure against unauthorised use.
- Contact service team.

1.4 What to Do in the Event of an Accident

- Notify first aiders, the ambulance service and/or immediate care doctor:
  - Where did the accident happen (address, workshop, ...)?
  - What happened?
  - How many are injured?
  - What injuries have occurred?
  - Who is reporting the accident?
- Keep calm and answer questions.

1.5 Requirements for the Operating Personnel

All persons involved in the operation of the equipment must:

- be 18 years of age or older,
- have the mental and physical capacity for their role,
- be demonstrably trained and instructed in writing in the operation of the equipment,
- have read and understood the operating instructions, and in particular the instructions on the procedure in the event of a malfunction,
- show knowledge and experience in handling the equipment and the dangers posed,
- have had certified training regarding safety regulations.

1.6 Requirements on Service Personnel

Persons who are entrusted with the installation, maintenance and/or dismantling of the equipment must in addition:

- be demonstrably trained and instructed in the required work,
- can provide evidence of appropriate qualification for work on the electrical system of the equipment (e.g. as a qualified electrician),
- be able to demonstrate expertise for vehicle lifts. This includes sufficient knowledge in the field of lifts and the relevant statutory occupational health and safety regulations, accident prevention regulations and generally accepted rules of technology to be able to assess the safe working condition

of the lift to be tested.
Qualified persons shall not only consider the current condition of the lift during the inspection. They must also be able to estimate how the lift and its structural parts will behave under operational conditions in the sequence and how wear, aging and the like will affect the safety of the lift.

1.7 Intended Use

- This lift is exclusively intended for the safe lifting and lowering of passenger cars and commercial vehicles within the scope of service and repair work.
- In compliance with the load distribution regulations of DIN EN 1493, the permitted load capacity on the identification plate must not be exceeded.
- Only vehicles which are suitable for the lifting equipment due to their shape and the positioning of their lifting points may be lifted.
- The lift must only be operated in the temperature range 5 to 40 °C at a maximum humidity of 50% (at 40 °C).
- The lift must be protected from direct weather conditions at all times.
- The lift must only be operated on level and sufficiently load-bearing ground (see the foundation specifications!).
- The lift must not be modified without express written permission from the manufacturer. Non-compliance invalidates the declaration of conformity.

1.8 Inappropriate Use

- The lifting of other vehicles and loads is not permitted.
- Carrying of passengers is not permitted.
- Lifting the load with an additional hoist is prohibited.
- The lift must not be operated in potentially explosive and flammable operation rooms or in damp rooms (e.g. washing facilities).

2 System description

2.1 Service Life

The lift has been designed and tested for 22,000 load cycles according to DIN EN 1493. After reaching this number of cycles, or after a maximum of 10 years, the lift must be replaced by a new product or be given a general overhaul.

A general overhaul must be carried out by the manufacturer or persons authorised by them. Load-bearing structures must be inspected and, if necessary, other parts must be replaced according to the manufacturer's specifications.

2.2 General Machine Description

The MA STAR lift is made of profiles resistant to bending and torsion, in the 3.5 t variants these are rolled in a continuous process. The columns of the variants with 5.5 t or 6.5 t load capacity consist, among other things, of two folded column sections welded together. In all cases, they are welded to a sturdy base plate. The base plates ensure the columns are securely anchored to the ground. The column profile bears the weight of the lifted vehicle, accommodating the lifting carriage on the inner panel and the control unit on the outer panel. The cable routing on the back is covered by plastic panels and is only interrupted by the control unit.

Each lifting carriage is guided by 8 sliding blocks per horizontal surface. The nut pack with nut breakage detection is located in the lift carriage. Two support arms are attached to each lifting carriage, which in turn each accommodate a height-adjustable support disc. When the lift is lowered, the support arms can be swiveled freely. When raised, toothed segments automatically prevent the support arms from pivoting.

The stroke drive consists of an electric motor with an electrically releasing brake, which moves a spindle via a belt drive. A lifting or lowering movement is thereby triggered via the anti-rotation secured nut in the lifting carriage depending on the direction of rotation.

The control unit is located on the back of one or both column(s), depending on the equipment. Power is supplied via a connector plug at the upper end of the main column. The unit enables all functions for the safe operation of the lift and displays all operating states and errors that occur.

Depending on the situation, a signal sound indicates errors, incorrect operation or the reaching of the CE-defined stop height during the lowering process.

Proximity switches detect end positions, asynchronism and nut breakage.

Reaching an end position is signaled by the extinguishing of the respective direction button.

2.3 Control Description

The core of the control system is a control board that performs, monitors and controls all electrical functions necessary for safe operation of the plant. This control board is installed at the rear of the control column below the control panel.

The lift is operated at the control unit with two push buttons. These have arrows, which show the direction of movement. Its blue backlight, which activates depending on the operating status and the possible directions of travel, enables intuitive operation of the lift.

Above the two control buttons is a fault indicator, which is backlit in either a flashing or continuous red in the case of a malfunction.

The lift can be equipped with a second control unit on the opposite column. Here, the arrangement and function of the operating buttons and the fault indicator are identical. While the emergency stop function on the main operating column is ensured by the main switch, an EMERGENCY STOP button is also provided on the counter column.

The lift can additionally be fitted with a height limit light barrier and/or an additional signal sound indicator.

3 Safety Features

WARNING

Safety devices must not be bypassed, blocked or otherwise rendered unusable.

3.1 Emergency stop and emergency stop

The main switch on the control panel performs the emergency stop function (all-pole disconnection). When switching off (switch position "0"), the power supply to the board is switched off and all movements are stopped. Restart after power on is prevented. The board reboots.

On the optional second operating unit there is an emergency stop pushbutton which, when pressed, interrupts the power supply to the drives and thus puts the system in a safe state. This impact button can be unlocked by pulling it.

WARNING

The Schuko sockets on the control panel remain powered.
Before working on the electrical installation of the unit, disconnect it from the mains.

3.2 Deadman

The pushbuttons for lifting and lowering are designed with automatic reset (deadman circuit), which ensures that the travel command is only executed when the pushbutton is pressed.

3.3 Synchronization control

The load supports of the two lifting columns move up and down synchronously. The control of the lifting system detects height differences and keeps the height of the two sides within the range of approx. ±15mm.

3.4 Synchronization monitoring

If, for whatever reason, the synchronization control does not work properly, the synchronization monitoring of the system takes effect. If the lifting heights at both columns drift apart by more than 50 mm, the control system switches off the system to prevent a dangerous skew.

3.5 Nut break detection

The support nut is subject to natural wear and consequently has a limited service life. This wear can and must be checked regularly (see section „Nut break detection“) and the pair of nuts replaced if necessary.
If the progressive wear has not been detected in time, the support nut will break. In this case, the load is taken over by a safety nut in order to be able to lower the vehicle safely. The changed distance between the support nut and the safety nut triggers a mechanical flap, the so-called "giraffe". When the lower end position is reached, a sensor is actuated by the Giraffe, which prevents it from being lifted again. The system cannot be used again until the pair of nuts has been replaced and the error has been reset.

3.6 Obstacle drive

If the support arm or the lift carriage is blocked during lowering, the spindle is lifted upwards. The sensor at the top of the spindle loses its signal and the control detects a blockage during lowering.
The load can be moved freely upwards to remove the obstacle.

NOTICE

The system does not detect any obstacles under the vehicle.

3.7 Support arm lock

When fully lowered, the support arms can be pivoted freely. When the vehicle is raised, toothed segments automatically engage and lock the support arms in their current swivel position to prevent unintentional movement of the vehicle when raised.

3.8 Self-braking spindle drive

The spindle drive is designed so that a lowering movement comes to a standstill without external brakes. This is made possible by a coordinated combination of spindle diameter, thread pitch, the material pairing of nut and spindle, and the lubricant.
This design of the spindle drive also prevents the stage from lowering automatically, e.g. due to vibrations (self-locking).

WARNING

To maintain the self-braking and self-locking function, only approved lubricant may be used (see lubricant list in the appendix).

3.9 Engine brake

The drive motors are equipped with an automatic spring-applied brake. This brake is sized so that it alone would be able to prevent the load from sinking.
If the controller receives a travel command (up or down), the motors also energize the corresponding brake. An electromagnet separates the brake pad and brake disc against the permanently acting spring pressure and the lifting or lowering movement can be carried out without this braking effect.
When the run command is terminated by releasing the pushbutton, the motors and brakes are de-energized (dead man, see section “Dead man”). The brake magnet loses its effect and the brake springs, similar to a spring accumulator, press the brake pad and brake disc together again.

3.10 CE-stop

When the lifting system is lowered, crushing or shearing edges occur underneath the support and the load support. For maximum safety when reaching the lower end position, the lifting movement stops automatically 300 mm before the lowest position (CE stop). Before continuing, the operator must ensure that there is no one in the danger zone and that there are no objects under the load-bearing equipment.
Further lowering is only possible after releasing and pressing the lowering button again.

3.11 Lifting Screw Cover

The spindle is surrounded on three sides by the column outline. The side facing the vehicle is open to allow the lift carriage to move. To prevent accidental contact with the spindle and any resulting injuries, this side is covered.
A black band of fabric foil is stretched between the motor plate and the base plate. This belt is deflected at the lift carriage so that the free area above and below the lift carriage is permanently covered.

3.12 Ceiling light barrier (optional)

In workshops with low ceilings, there is a risk that the vehicle will bump, creating a dangerous situation. An optional ceiling light barrier can be installed to prevent these hazards.
The overhead light barrier monitors the area between the lifting columns at the height of the assembly point. If the light beam is interrupted, e.g. by a vehicle, the control system switches off the lifting movement and only allows downward travel.

4 Technical Data

4.1 Overview with components

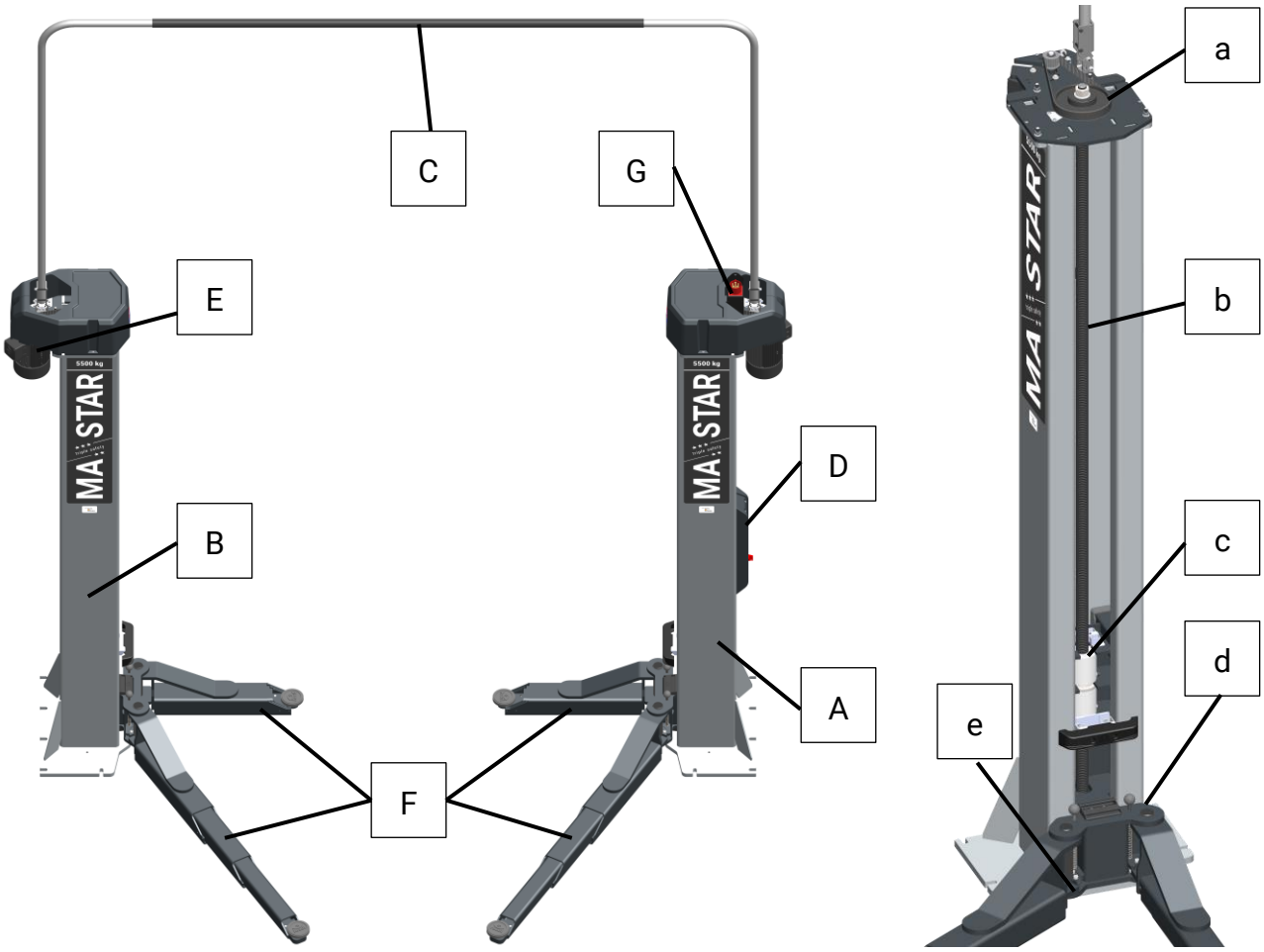

A	Control column	**a**	Toothed belt drive
B	Counter column	**b**	Trapezoidal spindle
C	Cable bridge	**c**	Nut package
D	Control unit	**d**	Lifting carriage (with support arms)
E	Drive motor	**e**	Support arm locking device
F	Support arms		
G	Connector plug		

4.2 Technical Data

MA STAR type	3.5 A	3.5 S	5.5			6.5	
Rated capacity [kg]	3500		5500			6500	
Total height HG [mm]	4499		5193			5193	
Total width BG [mm]	3592	4100	4000	4100	4250	4192	5193
Clearance height HL [mm]	4452		5146			5146	
Stroke HW [mm]	1885		2000			1950	
Lifting height max. HO [mm]	1995		2115			2065	
Lower swing height HU [mm]	100		120			144	
Adjustment range of HAT mounting plate [mm]	80…110		85…115			85…115	
Extension range of support arm, short LT [mm]	630…1240		---			---	
Swivel range support arm short [°]	180	102,5	---			---	
Extension range support arm long [mm]	920…1490	---	---			---	
Swivel range support arm long [°]	102,5	---	100			100	
Acquisition area [mm]	---		965…1845			1037…1987	
Clear column width BL [mm]	2660	2697	2849	2949	3099	2973	3127
Outer column width BA [mm]	3242	3097	3479	3579	3729	3603	3753
Outer dimension base plate [mm]	3351	3307	3689	3789	3939	4043	4193
Inner dimension base plate BGi [mm]	2643	2707	2729	2829	2979	2813	2963
Clearance BH [mm]	2400	2400	2530	2630	2780	2630	2780
Operating temperature [°C]	+5...+40						
Dead weight of both columns without / with packaging [kg]	650 / 740	635 / 725	1320 / 1525			1520 / 1780	
Adhesive mortar for anchor rod	HILTI HIT HY 200-A						
Anchor rod	HAS U 5.8 M16					HAS U 5.8 M20	
Required concrete quality at least	C20/25 (DIN EN 1992)						
Drive power [kW]	2x 3,0		2x 4,0				
Duty cycle	S3-20%						
Lifting/lowering time [s]	40					44	
Packing dimensions (L x W x H) [mm]	2925 x 1100 x 710		2 packages each 3185 x 760 x 960			2 packages each 3185 x 800 x 1100	

MA STAR type	Supply voltage	On-site back-up fuse	RCD
3.5 A/S	3x 400 V/50 Hz + N + PE	C16A	30 mA
	3x 230 V/50 Hz + N + PE	C25A	
	3x 400 V/60 Hz + N + PE	C16A	
	3x 230 V/60 Hz + N + PE	C25A	
5.5 / 6.5	3x 400 V/50 Hz + N + PE	C32A	

4.2.1 Installation diagram

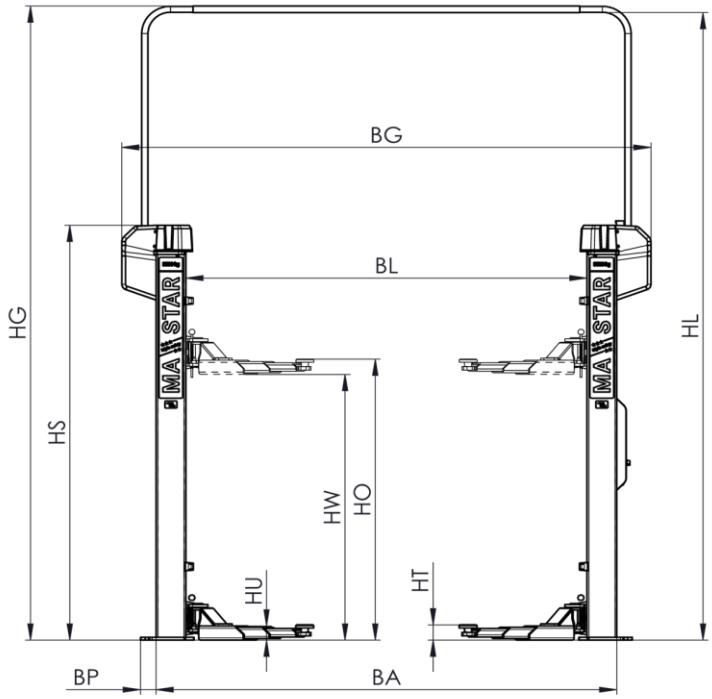

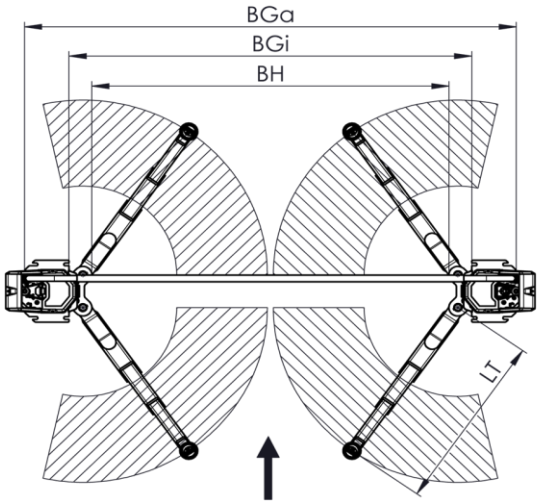

4.2.2 Danger Zone

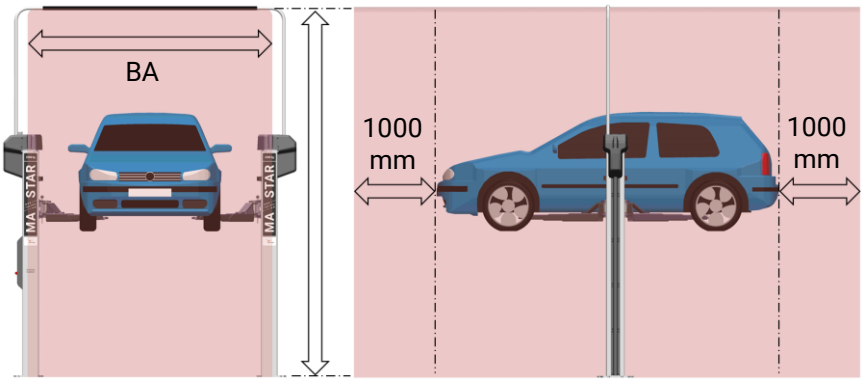

5 Transport, Handling and Storage

5.1 Safety Instructions

WARNING

- Wear personal protective equipment.
- Standing under a suspended load is prohibited.
- The transport and storage of packages is only permitted using original transport racks. Observe the max. stacking height.
- Before removing the packaging straps, secure the packages against falling and maintain a safe distance. Rebounding packaging straps can cause injuries!
- Only lift and set up the lift columns using the marked connection points. Pay attention to the centre of gravity (marked COG).
- Only use lifting equipment and slings that are suitable in terms of type and permitted load capacity.
- Always ensure that the parts to be transported are suspended or loaded properly and in a fall-proof manner, taking into account their size, weight and centre of gravity. Observe transport regulations.

5.2 Scope of Delivery

Lifts with 3.5 t load capacity are shipped ex works in one package as standard, lifts with higher load capacity in two packages. Content:

- 2 columns, screwed in racks
- 2 covers
- 1 instruction manual
- 2 sets (2 pieces each) support arms
- 4 lock elements
- 4 support discs
- 1 set impact protectors for support arms
- 1 set connector cable
- 1 cable bridge with mounting parts
- Spindle oil 500 ml
- Optional accessories

The number of delivered packages and contents must be checked for damage and completeness according to the order confirmation. Any transport damage must be documented immediately and reported to the delivery carrier.

5.3 Packaging Information

5.3.1 Dimensions and Weight

MA STAR type	3.5 A	3.5 S	5.5	6.5
Dimensions [mm]	2925 x 1100 x 710		3185 x 760 x 960	3185 x 800 x 1000
Weight approx. [kg]	2x 740	2x 720	2x 800	2x 900

5.3.2 Centre of Gravity of the Packaged Lift

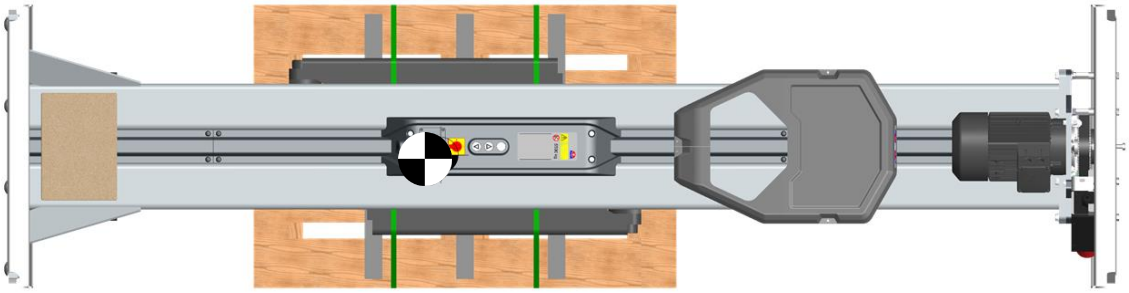

5.4 Transport and Handling

The transport and handling of the lift is only permitted using the original transport racks. The pick-up points shown below must be used for the loading and unloading of the packaged lift.

IMPORTANT: Strapping of the columns is not permitted!

The dimensions and centre of gravity of the packaged lift are shown in the section “Packaging Information”.

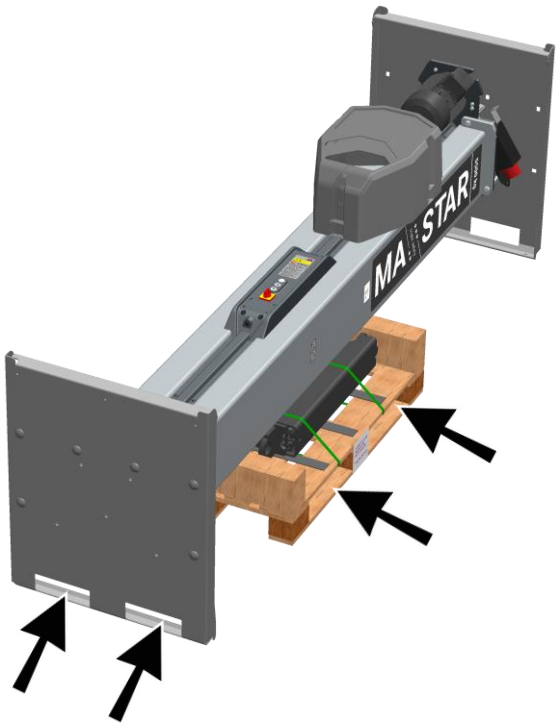

5.5 Storage

The packages must be stored in a covered location and protected from direct sunlight. They must be stored at low humidity and at a temperature between 0 °C and +40 °C.

The lifts may only be stacked in the original transport racks, the max. stacking height is two transport racks (see also section “Transport and handling”).

Packaging waste must be disposed of in accordance with applicable environmental regulations.

6 Installation

6.1 Safety Instructions

WARNING

- Installation may only be carried out by authorised and trained specialist staff. Such specialist staff include authorised, trained specialists employed by the manufacturer, the authorised dealers and the relevant service partners.
- The electrical connection must not be made until the preceding installation steps described have been successfully completed.
- Work on the electrical installation may only be carried out by qualified electricians.
- Personal protective equipment must be worn during all work.
- Work may only be carried out with tools suitable for this purpose. For screws and nuts, use a wrench with a suitable width across flats.
- Where reference is made to the use of special tools, use them.
- For the erection of the columns, hoists with suitable lifting gear (hook with safety flap / latch) and slings (chain slings) must be used.

6.2 Setting up the Lifting Columns

WARNING

- The columns must be raised with extreme care and caution.
- The hanger must be vertical and taut at all times during erection to prevent dangerous sagging.

NOTICE

Contact of the reciprocator with foreign objects during setup can cause damage to the reciprocator and spindle bearing.

6.2.1 Set-up with set-up device (MA STAR 3.5 only)

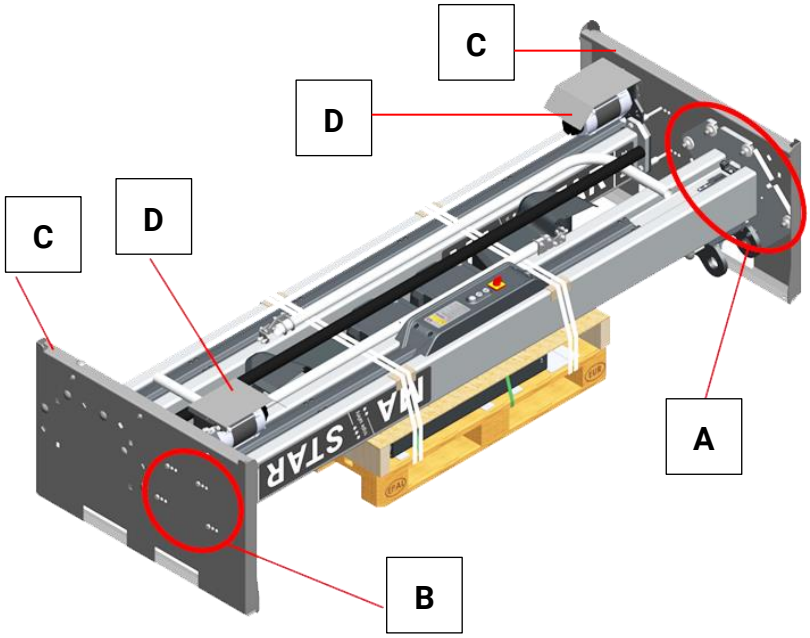

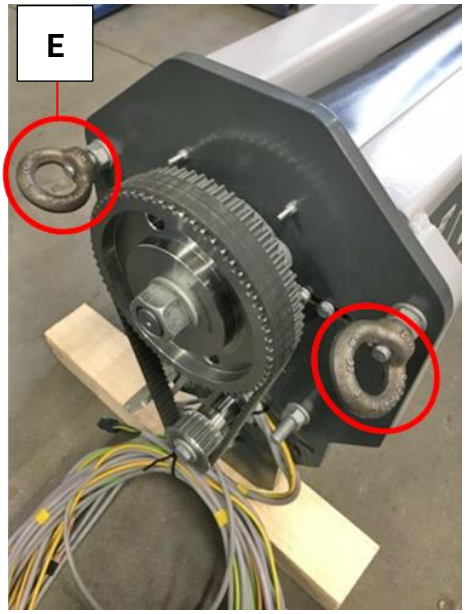

A	Base plate	**C**	Packaging sheets	**E**	M12 ring nuts
B	Motor plate	**D**	Engine guards		

1. Place the packed lift at the installation site using a forklift, pallet truck or similar piece of equipment.
2. Remove and properly dispose of plastic film and packing tape.
3. Loosen the nuts on the base plates and the screw connections on the motor plate. Store screw fittings
4. Remove and dispose of the packing sheets.
5. Remove and dispose of the motor guard plate.
6. Fit M12 ring nuts on the motor plate's front screws. Carefully mount the set-up device on the top of the base plate to avoid damage to the paint. Use the carriage bolts on the transportation plate for this purpose and install from below through the base plate. Fastening schemes:

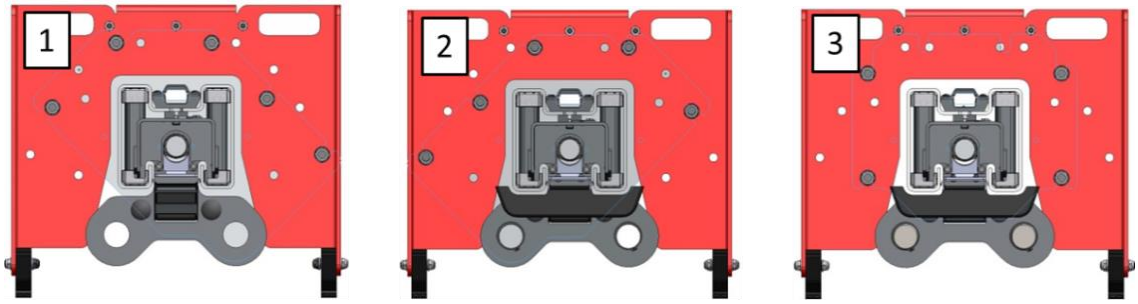

MA STAR 3.5 A – column right | MA STAR 3.5 A – column left | MA STAR 3.5 S

7 Fasten the permitted slings to the ring nuts and slowly raise the columns.

8 a. After the setup procedure, loosen the mounting screws of the setup device and remove the nuts.

b. Then carefully remove the device by lifting it upwards.

c. Remove the carriage bolts by tilting the column slightly.

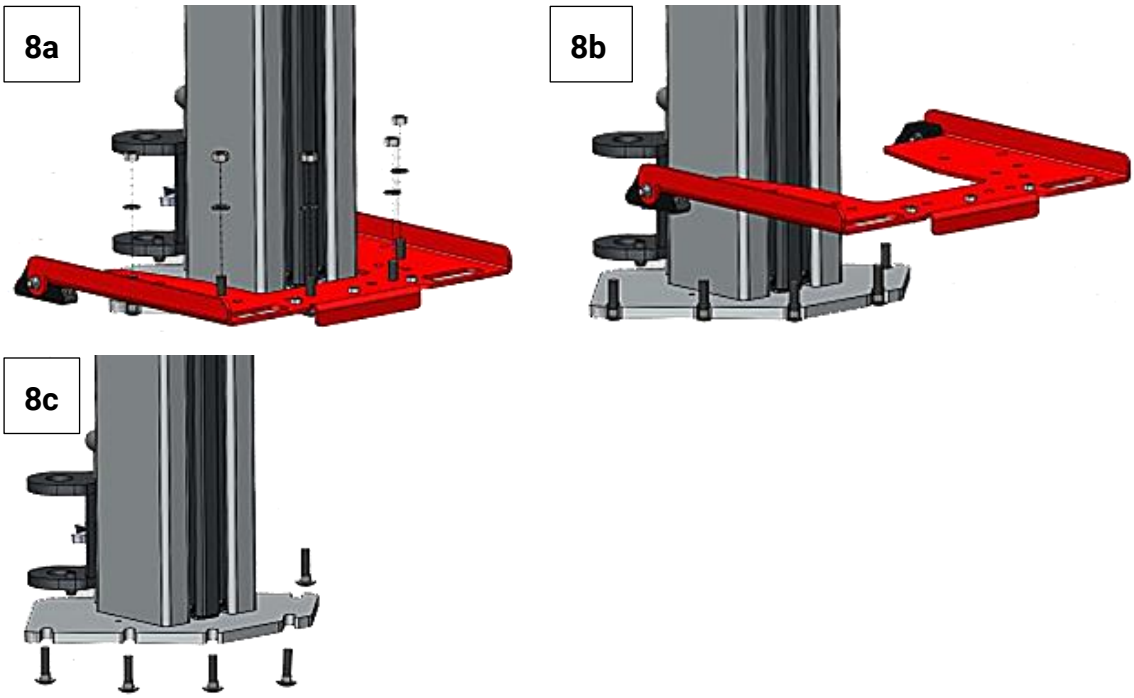

9 Repeat the installation procedure for the second column.

6.2.2 Set-up without set-up device (all types)

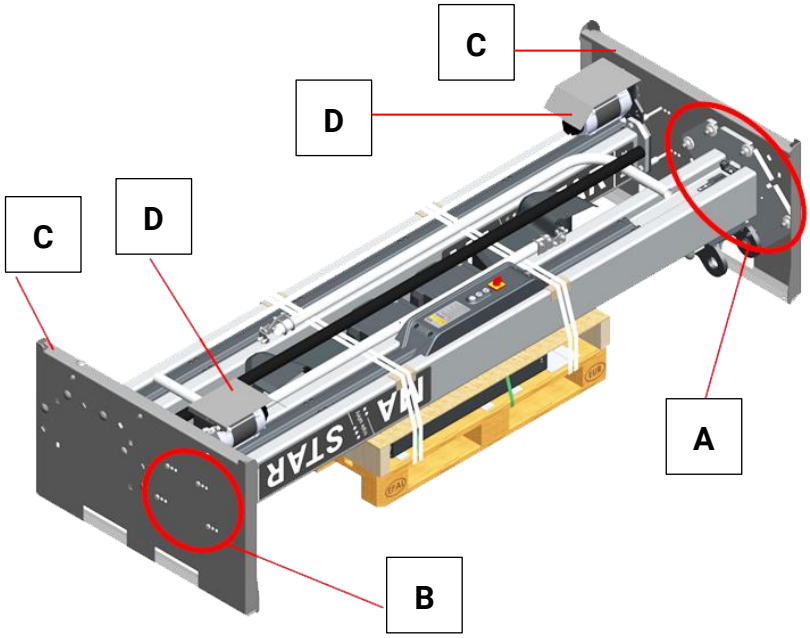

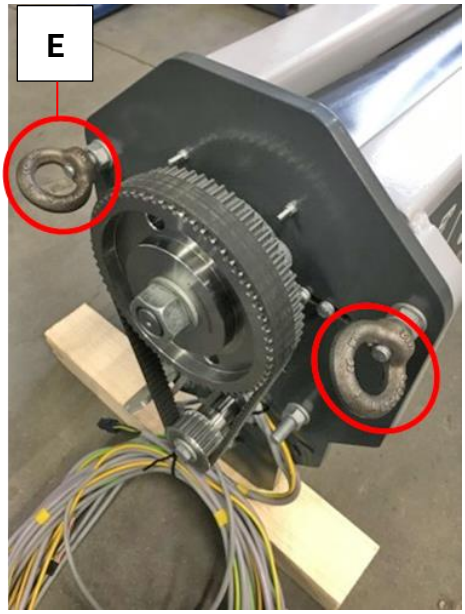

A	Base plate	**C**	Packaging sheets	**E**	M12 ring nuts
B	Motor plate	**D**	Engine guards		

1. Place the packed lift at the installation site using a forklift, pallet truck or similar piece of equipment.
2. Remove and properly dispose of plastic film and packing tape.
3. Loosen nuts on the base plates and the screw connections on the motor plate.
4. Remove and dispose of the packing sheets.
5. Remove and dispose of the motor guard plate (MA STAR 3.5).
6. Fit M12 ring nuts on the motor plate's front screws.
7. Fasten the permitted slings to the ring nuts and slowly raise the columns. When erecting the columns, the support edges (tipping point) of the base plates must be underlaid with a non-slip rubber pad to protect against damage to the paintwork.

6.3 Important information on anchor installation

Detailed installation instructions are supplied with each installation material. More information can be found on the anchor manufacturer's website: https://www.hilti.de

All relevant specifications for anchoring (foundation thickness / anchoring depth / tightening torque) can be found in the corresponding foundation plans.

6.3.1 Installation accessories

WARNING

- Only the installation material listed below is permitted for anchoring the lift!
- For alternative installation material, the required proof of stability must be provided in advance by the installation company / commissioning contractor!

Direct mounting of the base plate / column

MA STAR type	Design	Quantity	Installation accessories	VM-No.
3.5 A + S	with mounting plate	12	HILTI HAS-U 5.8 M12x200 HILTI HIT-HY 200-A (500 ml)	VM 999054
3.5 A	including / excluding floor structure	10	HILTI HAS-U 5.8 M16x300 HILTI HIT-HY 200-A (500 ml)	VM 999079
3.5 S		12		VM 999080
5.5		12		VM 999080
6.5		12	HILTI HAS-U 5.8 M20x350 HILTI HIT-HY 200-A (500 ml)	VM 999085

6.3.2 Processing / Curing Time

All data refers to dry concrete. When anchoring in wet concrete, follow the manufacturer's instructions.

HILTI HIT-HY 200-A

Substrate temperature [°C]	Processing time [min]	Curing time [min]
-10 … -5	120	420
> -5 … 0	50	240
> 0 … 5	25	120
> 5 … 10	15	75
> 10 … 20	7	45
> 20 … 30	4	30
> 30 … 40	3	30

6.3.3 Create and clean boreholes

The boreholes can be created by conventional percussion drilling or using a hollow drill with integrated suction.

If the holes are made conventionally, they must be blown out and cleaned with a suitable wire brush before the injection mortar is placed.

The given order is:

1 Blow out all drill dust in the borehole.

2 Brush out with suitable round brush to remove dust deposits on the bore wall.

3 Blow out the bore dust again.

When using a hollow drill with integrated suction, no cleaning of the drill holes is necessary, see section „Tools for anchor installation“.

6.3.4 Shortening the Anchor Rods

The anchor rods may have to be shortened to suit the subsoil conditions, see specifications in the foundation plan.

When shortening, make sure that the anchor rods are cut off at the **bottom** end. The hexagon at the top end of the anchor rod **MUST** be retained.

With this anchoring system, sharpening of the shortened end is not necessary.

NOTICE

If the hexagon on the top end is removed, the approval for the anchoring system is invalidated!

6.3.5 Tools for anchor installation

- **Hollow drill**

TE-CD or TE-YD with suitable suction unit

- **Wire brush**

Wire brush for drill/accumulator screwdriver or manual; must be adapted to drill hole diameter

- **Squeezer**

A special grouter is required for the injection mortar HILTI HIT-HY 200-A. See the manufacturer’s website for details.

a. Battery squeezer HDE 500 - A22

b. Manual squeezer HDM 500

The manufacturer’s app (HILTI Volume Calculator) can be used to determine the correct injection mortar filling capacity. Otherwise, see section “Anchor installation”.

For additional information on hollow drills and other assembly aids, please refer to the manufacturer's website.

6.4 Direct mounting

If the lifting columns are anchored directly to the floor, drilling templates are available for marking out and drilling the columns for each type of lifting system. These have the same outer contour as the base plate of the columns, without complicating the work with interfering parts.
The drive-up direction (MA STAR 3.5 A) and the center of the plant are marked by arrows. The positions of the anchors are integrated into the drilling templates so that the drill holes can be drilled directly on the drilling template or marked on the floor. The cable entry for underfloor cabling is also integrated.

NOTICE

If there is in-ground wiring, the openings in the base plates must be exactly above the cable ducts' ends!

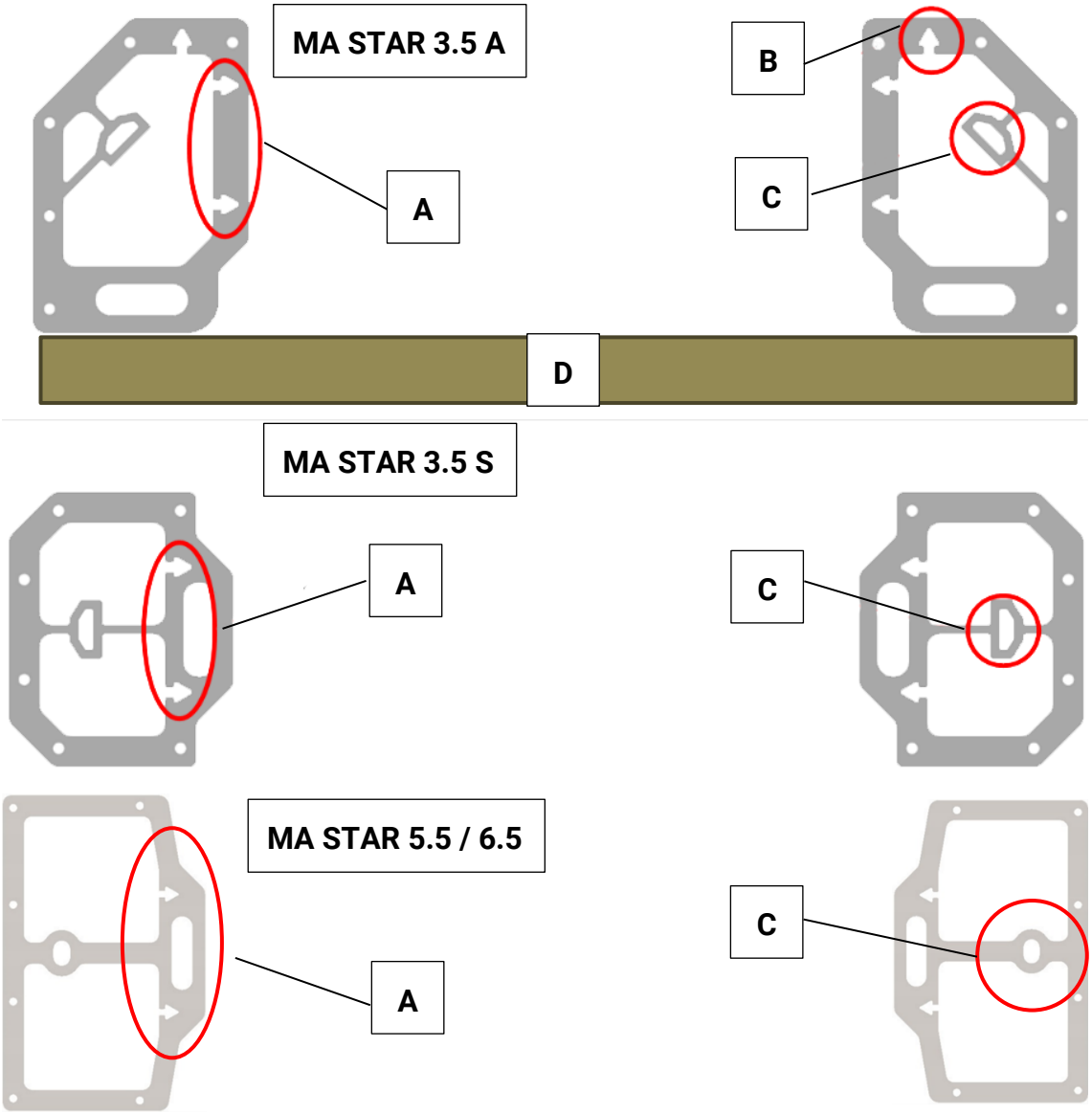

A	Inside of the lifting unit	**C**	Cable entry
B	Drive-up direction	**D**	Directional staff

1 Position the drilling templates according to the corresponding data sheet. **Observe the drive-up direction!**

2 Place the guide rail on the long narrow side and mark it. Check alignment of both lifting columns and correct if necessary.

3 The dimension BGi (inside distance between base plates) can be used as an auxiliary dimension for positioning.
The relevant dimensions in relation to the clear passage width (BH) are listed in section “Technical data”.

6.5 Mounting on mounting plate (MA STAR 3.5 only)

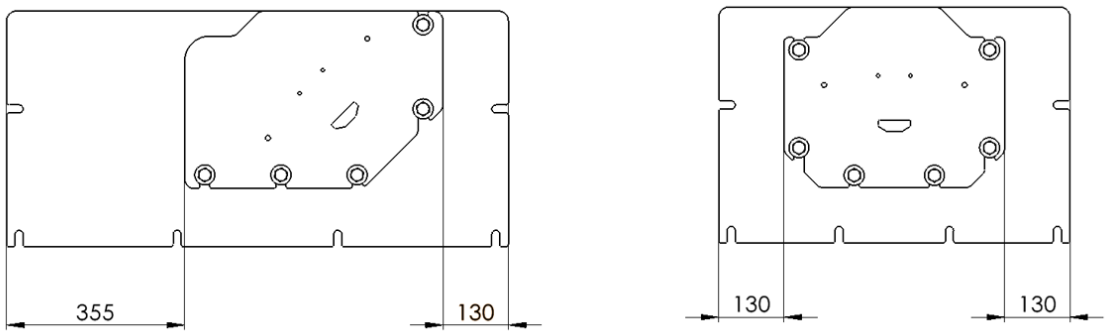

For workshops where the thickness of the base plate is too small for direct mounting, mounting plates (only for MA STAR 3.5!) are available. These mounting plates allow for smaller anchoring depths. The columns, in turn, are fixed to the mounting plates with machine screws. These screws are included with the mounting plates.

For fixing the columns on mounting plates, refer to the corresponding foundation plan.

The edge of the mounting plates is identical to the base plate of the columns on the inside of the system. Thus, the dimension BGi can be adopted for positioning.

In the direction of travel, the offset between the base plate and the mounting plate must be taken into account when positioning.

Alignment and checking of the column alignment is done with a straightedge placed on the narrow sides of the mounting plate.

When the mounting plates are positioned, the dowel holes can be drilled directly.

The specifications from the foundation plan for anchoring must be observed.

6.6 Set holes

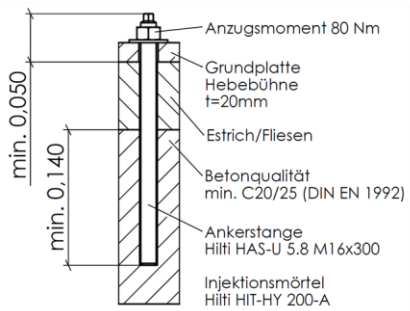

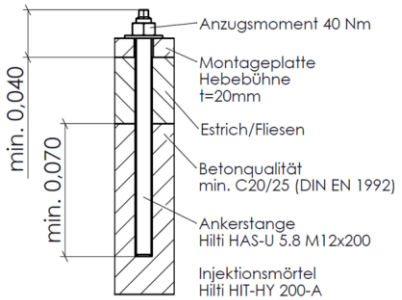

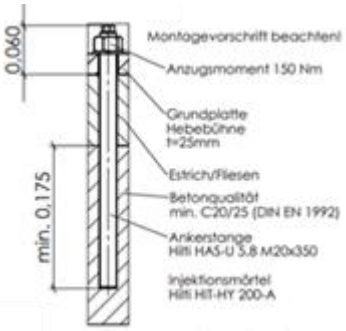

1 Determine the drilling depth. This is the sum of the anchorage depth and the thickness of the floor structure. The latter must be provided by the operator of the plant.

2 Set the drilling depth (stop on the impact drill) or mark on the drill (colored pencil, adhesive tape, ...).

3 Create vertical borehole by percussion drilling at the previously determined and marked positions.

4 Clean the borehole as specified. If the boreholes were created using a hollow drill and suction, borehole cleaning can be dispensed with.

6.7 Positioning the Lifting Columns

It is recommended that the lifting columns be placed over the holes after the holes have been drilled and before the anchors are installed. After gluing in the anchor rods, they interfere with the positioning of the lifting columns.

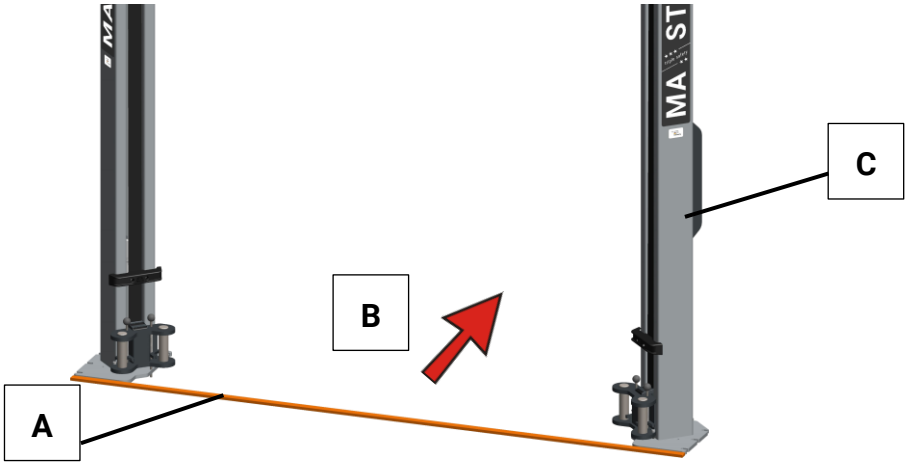

A Directional staff **B** Drive-up directio **C** Control colum

1 Place the lifting columns above the boreholes, operating column on the right in the drive-up direction.

2 Check alignment.

6.7.1 Align lifting columns

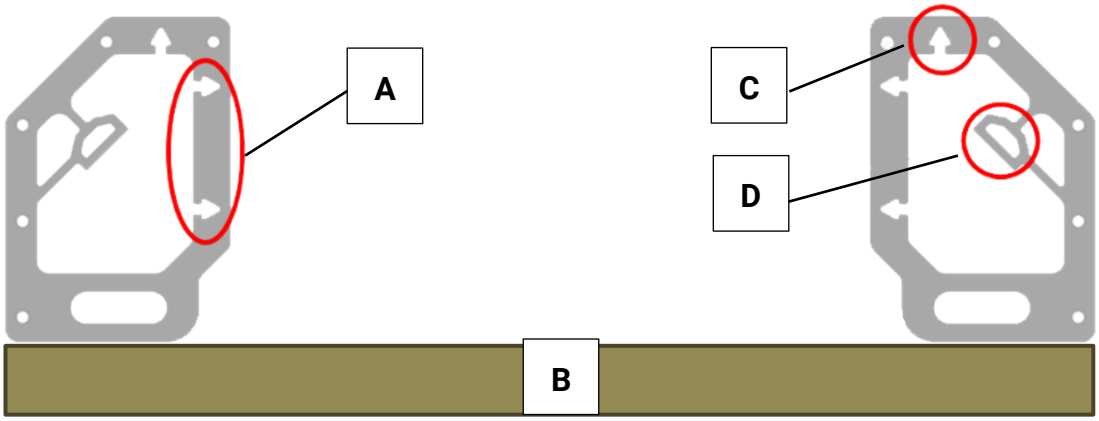

A	Inside of the lifting unit	**C**	Drive-up direction
B	Directional staff	**D**	Cable entr

After positioning, the narrow sides of the base plates must be aligned.

If the lifting columns are not vertical and/or do not rest snugly on the base, the base plate must be shimmed accordingly.

The base plates must be shimmed at the tie points and under the column contour until the columns are vertical and rest on the shims when the clearance is set.

Make sure that the holes for undercutting the base plate are not covered. Ensure that the opening in the base plate remains free if there is in-ground wiring.

6.7.2 Inferior

Place shims under the base plate/mounting plate at the tie points and along the column contour.

NOTICE

To prevent the column from tilting under load, the corners of the column profile and the undowelled corners of the base plate/mounting plate in particular must be shimmed.

6.8 Adjust the length of the anchor rods

The minimum length is (in each case without floor construction):

- 190 mm for HILTI HAS-U 5.8 M16x300
- 120 mm for HILTI HAS-U 5.8 M12x200
- 235 mm for HILTI HAS-U 5.8 M20x350

The additional length due to uneven floors (shims) is not taken into account.

6.8.1 Anchor Dimensions

MA STAR type			**3.5 with mounting plate**	**3.5**	**5.5**	**6.5**
Anchor rod			HILTI HAS-U 5.8 M12x200	HILTI HAS-U 5.8 M16x300		HILTI HAS-U 5.8 M20x350
Hole diameter	d0	[mm]	14	18		22
Through-hole in the attachment	df	[mm]	14	18		22
Anchorage depth in reinforced concrete	hef	[mm]	70	140		175
Tightening torque	Tinst	[Nm]	40	80		150
Width across flats	SW	[mm]	19	24		30

6.9 Anchoring the Columns

Observe the safety instructions for using the injection mortar!

NOTICE

Each borehole must be filled with injection mortar and then the anchor rod inserted. Several boreholes can be filled and then the prepared anchor rods can be screwed in. However, the processing time must be observed.

1 Insert the injection mortar into the grouter.
2 Reject the flow according to the manufacturer's specifications.
3 Fill the hole with injection mortar according to the manufacturer's specifications.
   a. When using a manual grouting device, fill the borehole 2/3 full with grout.
   b. If using an automatic grouting device, calculate the required quantity of grout, see section “Tools for anchor installation”
4 Insert the anchor rods into the holes by hand, turning them slightly.
5 Observe the curing time according to the manufacturer's specifications. Knock off hardened excess mortar.
6 Apply the prescribed torque.
7 Check alignment with spirit level.

6.10 Lining the Baseplates with Injection Mortar

Inject grout under the underlaid and anchored base plates. This improves smooth running when the lift is being operated, especially if the substrate is very uneven or the workshop floor is at a steep gradient.

Tested and approved for use by MAHA:
HILTI HIT-HY 200-A 500 ml

Adhere to the manufacturer's operating instructions!

1 Inject the grout through the holes in the base plates. If necessary, seal the gap between the base plate and the workshop floor all around, e.g. with silicone.
2 In addition, the injection mortar can also be injected into the gap between the base plate and the workshop floor.
3 After injecting, observe the curing time according to the manufacturer's instructions, see section “Processing / curing time”.

A Holes in the base plates **B** Gap between base plate and workshop floor

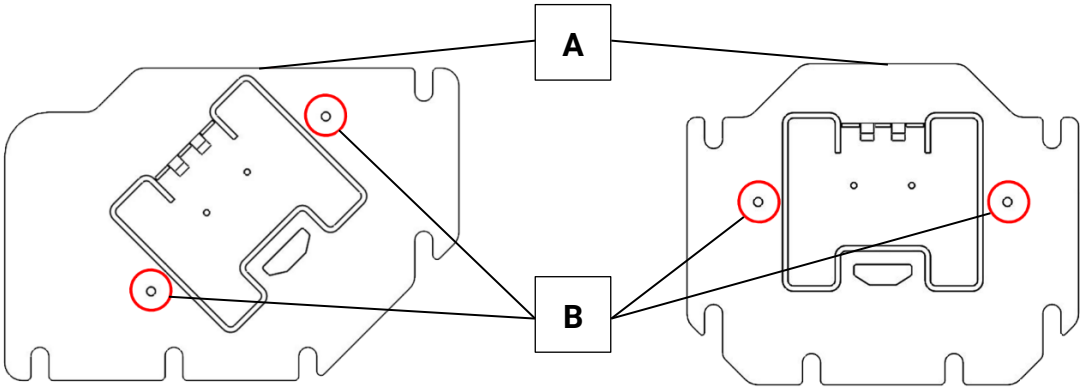
A
B

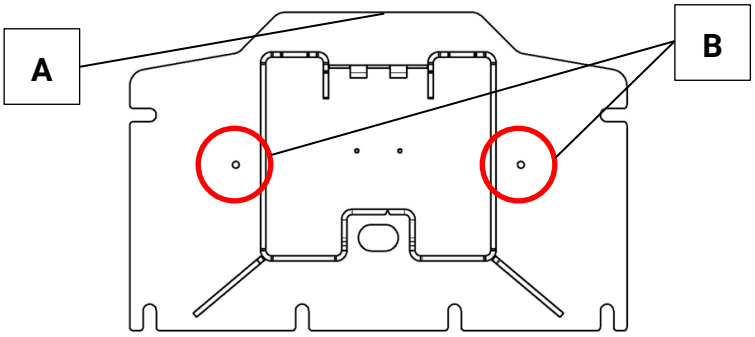
A
B

6.11 Installing the Main Plug

After setting up the columns, the CEE plug for the power supply must be fitted to the operating column.

1 Loosen the pre-installed screws in the head plate.

2 Fit CEE plug with holder and screw (MA STAR 3.5: Hexagon head screw SW 10; MA STAR 5.5 and 6.5: Tighten LFK screw with hexagon socket SW 4) to 10 Nm.

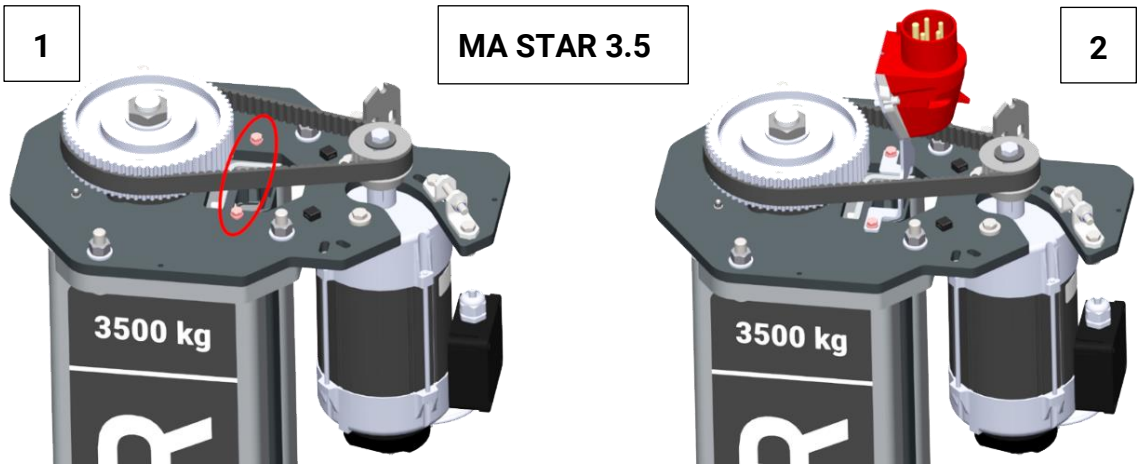

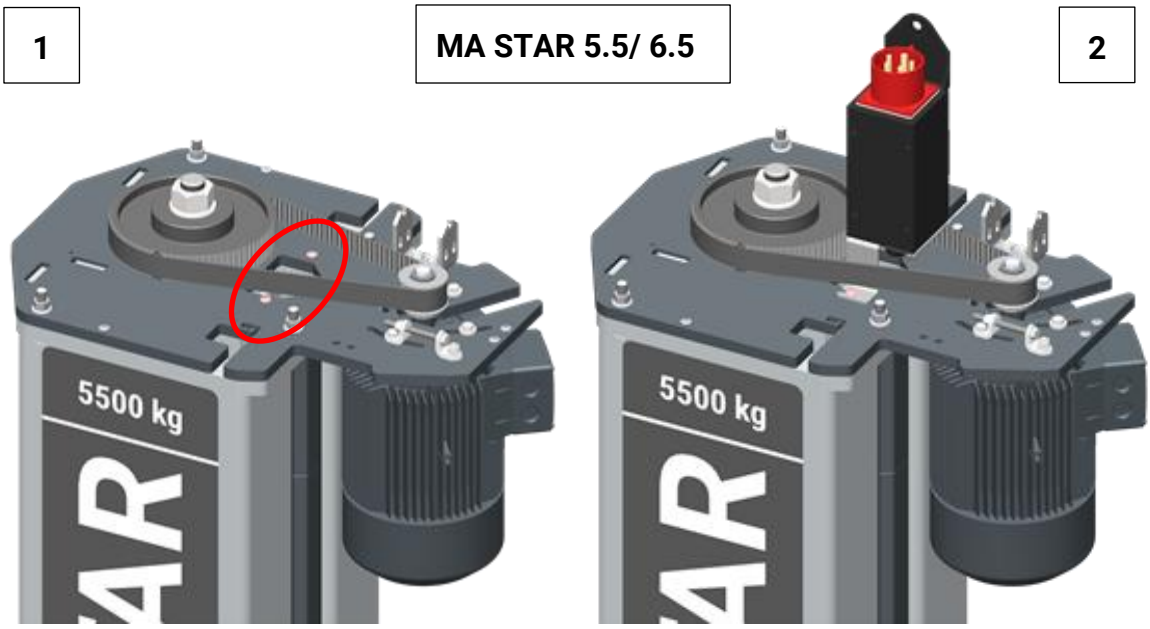

6.12 Electrical connection of the lifting columns

The lift's cables are factory-fitted to the counter column on delivery. For overhead wiring, these must be routed through the cable bridge to the control column.

NOTICE

There is a risk of collision with the vehicle roof if the vertical cable conduits are shortened to adapt to the ceiling height. A ceiling light barrier is optionally available.

6.12.1 Overhead Cable Installation

The distance between the cable bridge and the ceiling should be at least 50 mm if the lift is to work in the best way possible. The standard height of the lift incl. cable bridge can be found in the corresponding lift type's technical data sheet.

Proceed as follows if the cable bridge height needs to be adjusted due to the ceiling height:

1 Remove the cable conduit from the retaining plate.

2 Mark the required length on the conduit and drill a hole measuring 13 mm in diameter in the middle.

NOTICE

Both holes in the tube must be aligned with the holes in the holder so that the cable guide can be mounted and swiveled.

3 Saw off the cable conduit in the middle of the hole.

4 Fasten the cable conduit to the retaining plate. Ensure that the rotation lock is aligned [4a] and positioned correctly [4b]. Tighten the screws with 2.5 Nm.

NOTICE

Higher torques lead to cable conduit deformation!

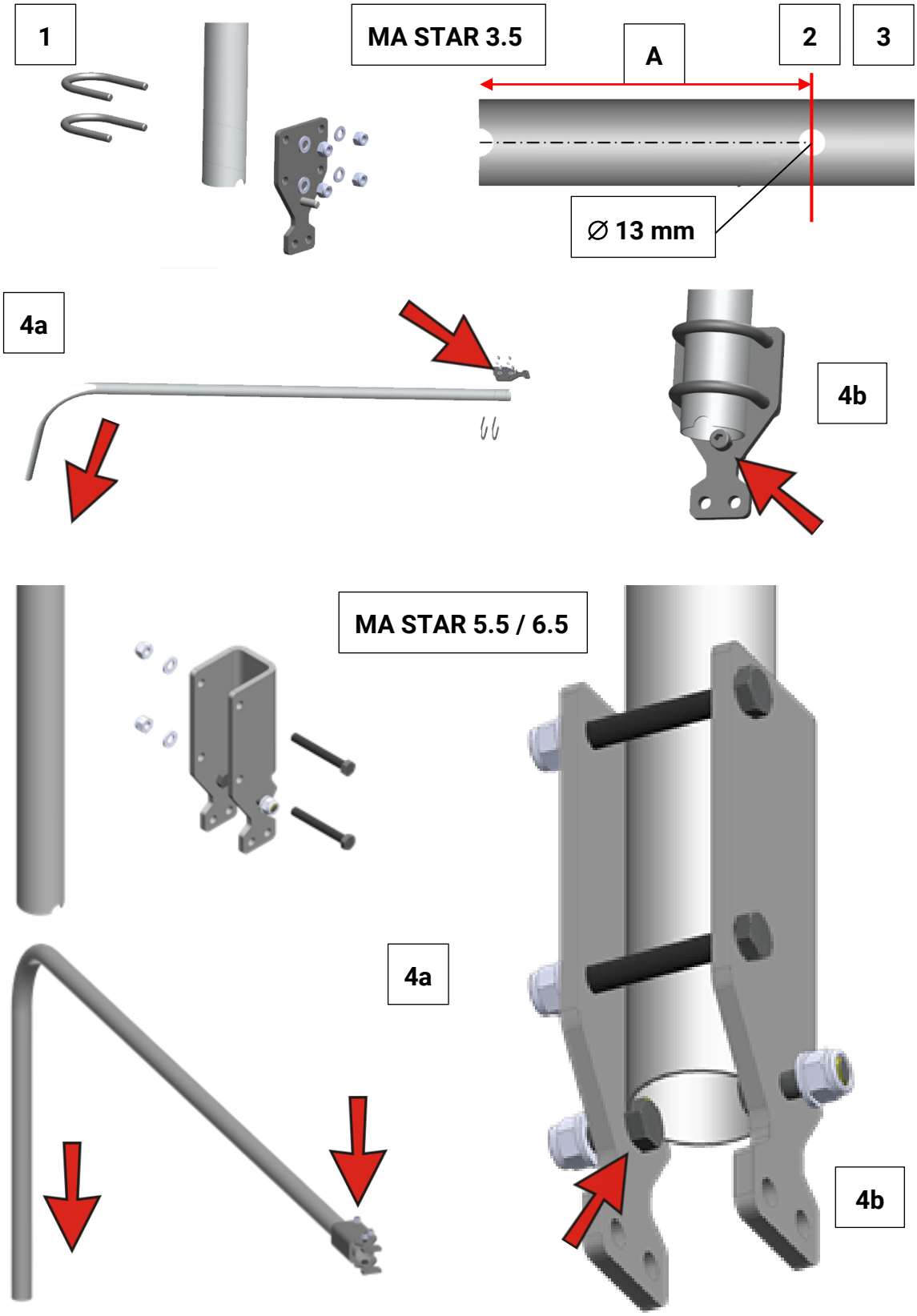
1
MA STAR 3.5
A
2
3
∅ 13 mm
4a
4b
MA STAR 5.5 / 6.5
4a
4b

If the vertical cable tubes are of the correct length, the cable bridge is installed as follows:

1 Check the orientation of the hinges (A) on the head plate. The hinges for the cable bridge should be installed as shown below; otherwise, correct the orientation.

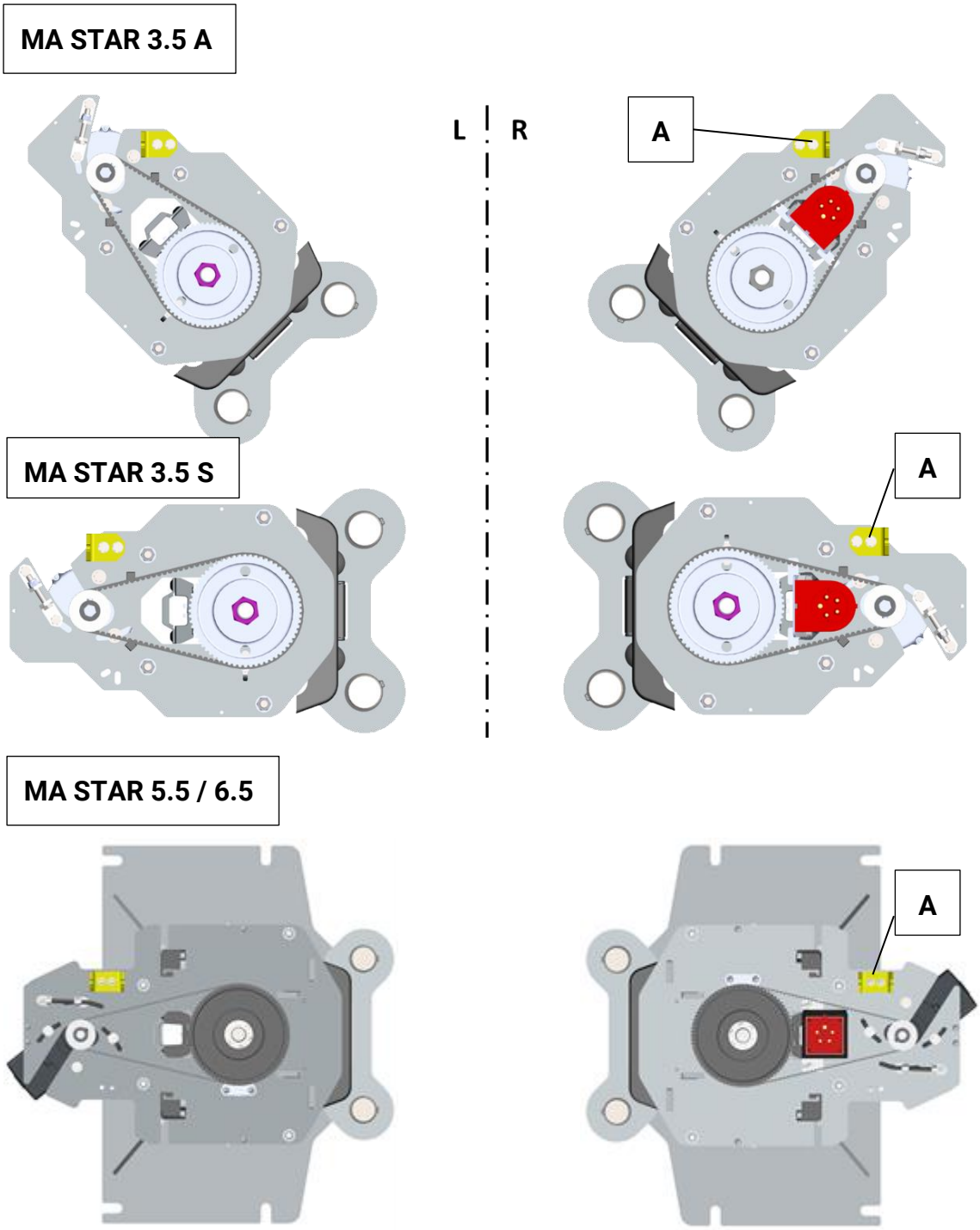

2 Install the cable conduit on the counter column (left). To do this, attach the retaining plate of the cable tube to the hinge as shown below. Hand-tighten the screw connection and then **loosen it by half a turn.**
Remove nut and washer for further assembly steps and set aside.
IMPORTANT: Loosening the screw connection is absolutely necessary so

that a defined swiveling movement of the cable bridge can be carried out in the following steps!

3 Pull the cables completely through the cable tube on the counter column.

NOTICE

To make it easier to pull in and to protect the plugs from damage, tie them together with insulating tape or a similar product.

4 Then pull the cables through the plastic tube and push it onto the cable tube.

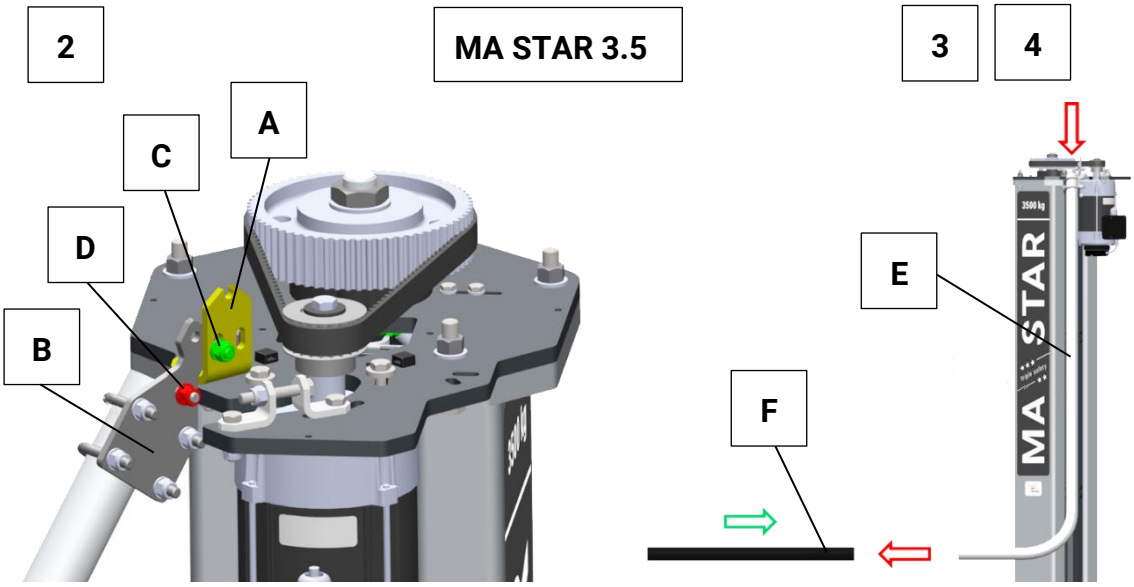

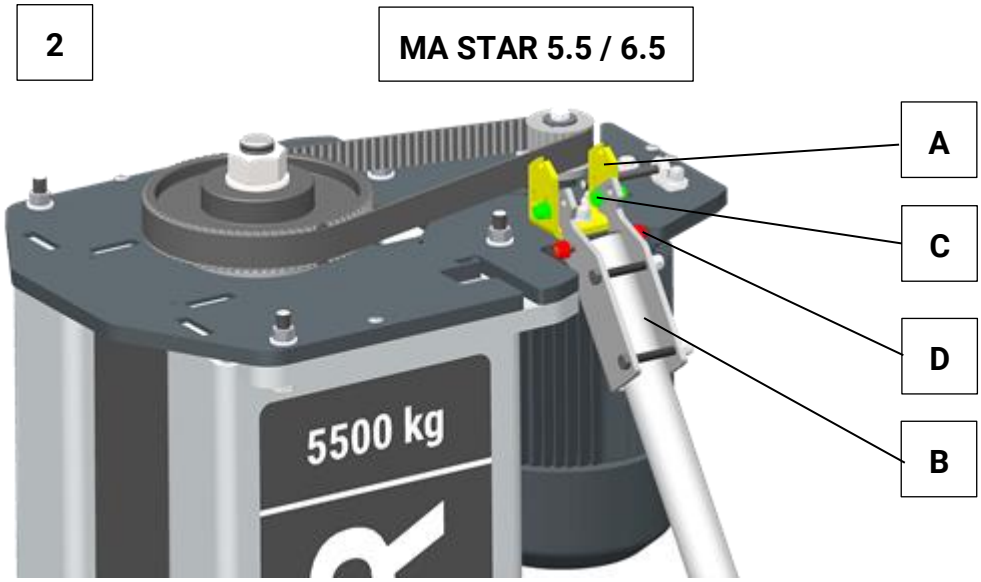

A	Hinge	**C**	Bolting	**E**	Cable conduit (counter column)
B	Retaining plate	**D**	Washer	**F**	Plastic pipe

5 Pull the cable completely through the cable tube of the control column and insert it into the plastic tube. Then attach the cable tube to the hinge of the operating column in the same way as in step 2.

6 Check the alignment of the cable tubes and correct if necessary. The overlap of the plastic pipe should be as equal as possible on both sides.

NOTICE

If the installation dimensions are tight, it may be necessary to shorten the plastic pipe.

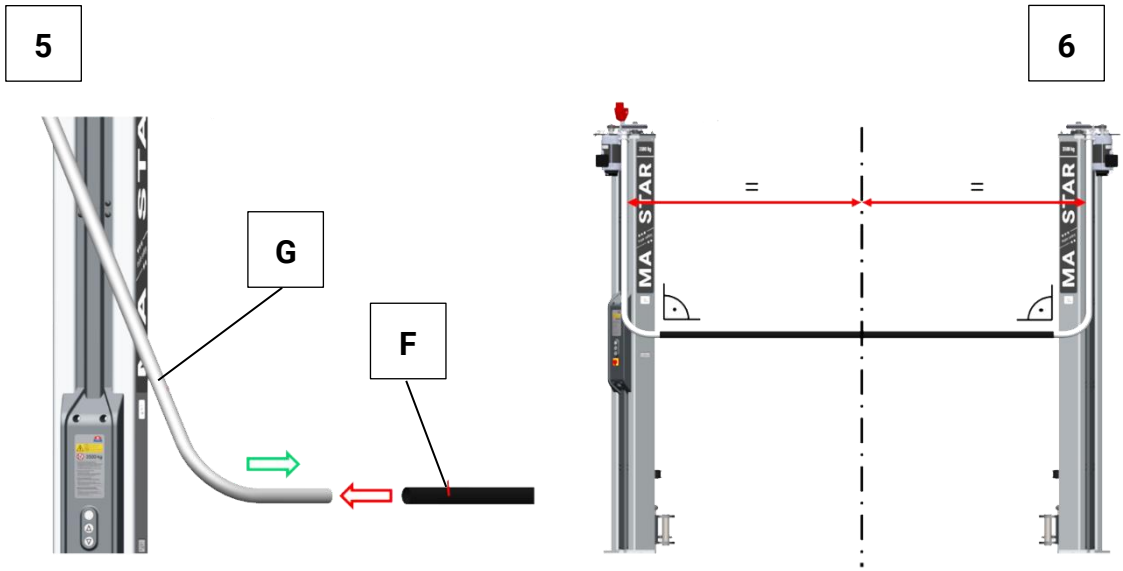

F Plastic pipe

G Cable conduit (control column)

7 Raise the cable bridge by a swiveling motion.

NOTICE

When swiveling the cable bridge, make sure that the cables cannot be damaged by shearing.

Ensure that both sides of the cable bridge are correctly locked.

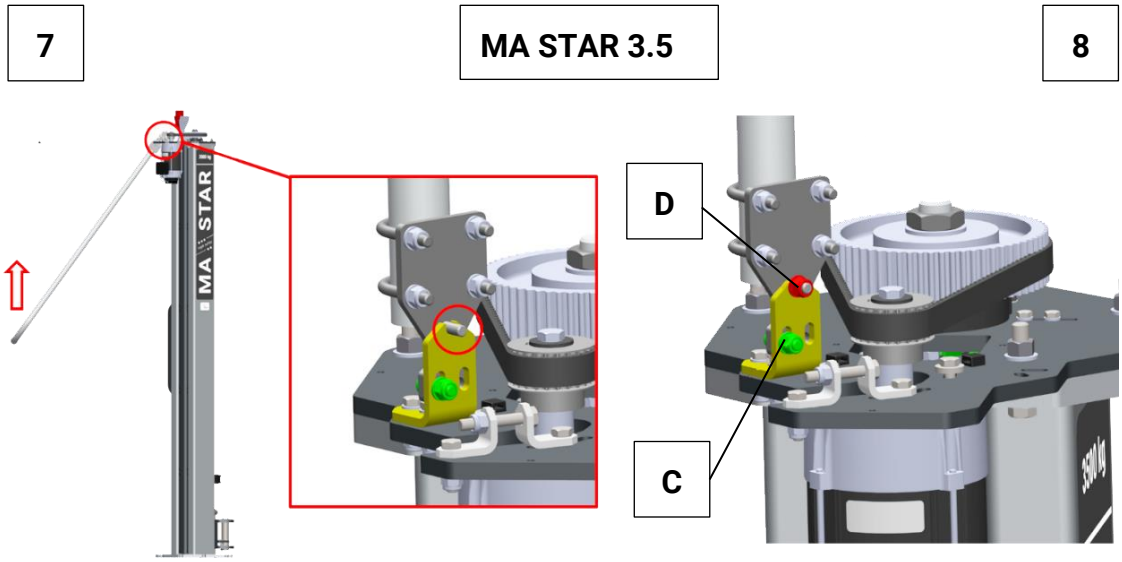

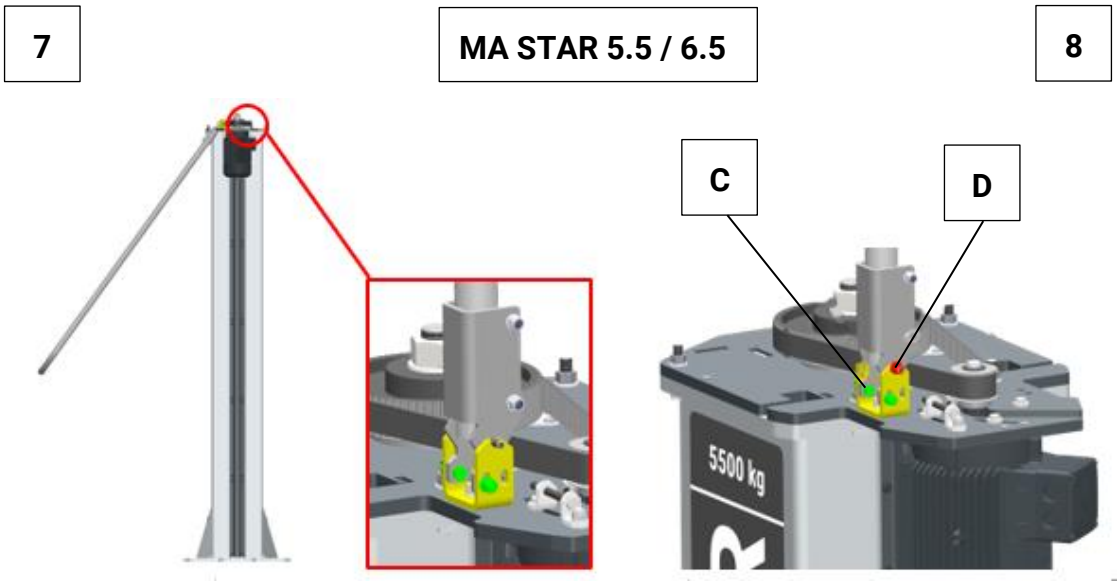

C Bolting **D** Washer

8 Check the alignment again and correct it if necessary. Then tighten the screw connections on both sides with 20 Nm.

6.12.2 Inground Cable Installation

The opening in the base plate must be positioned over the opening of the cable duct so that the on-site supply cable and the counter column's motor cable and control cable can be laid.

The specifications for the cable duct can be found in the corresponding foundation plan.

Each lift can be installed with in-ground wiring, but the cable bridge is always included in the standard scope of delivery.

MA STAR 3.5 A

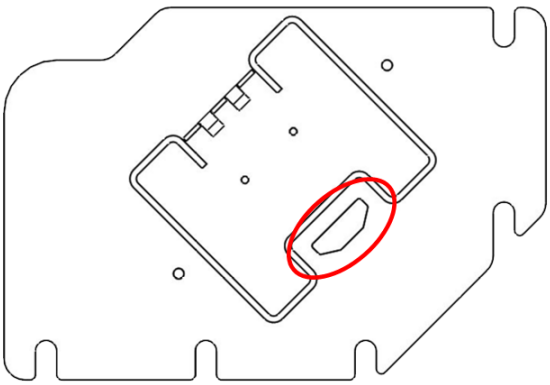

MA STAR 3.5 S

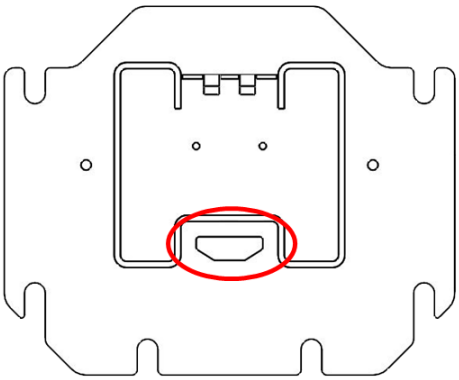

MA STAR 5.5 / 6.5

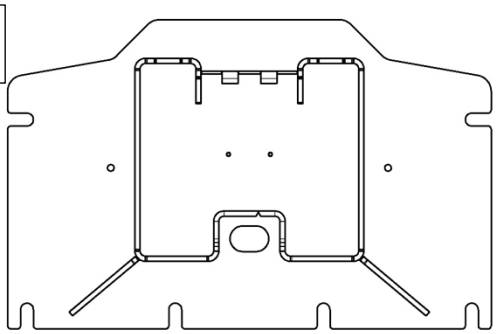

6.13 The lift's electrical connection

NOTICE

Remove the customer's fuse when working on the electrical part of the lift. The lift controller's wiring in the operating unit must not be changed.

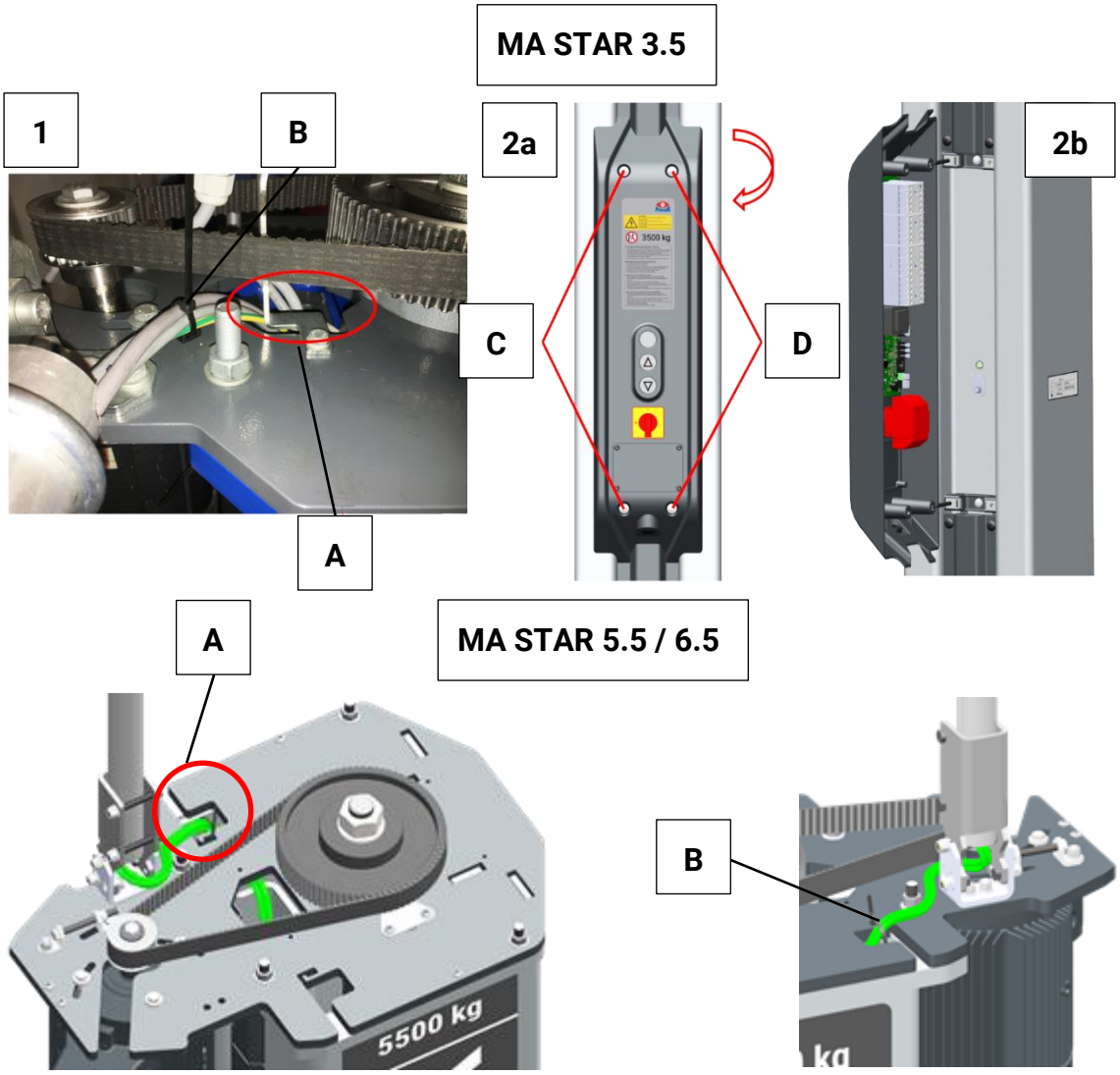

A	Opening of the head plate	**C**	Screws (2x left)
B	Fixation (cable tie)	**D**	Screws (2x right)

1 After mounting the cable bridge

- **MA STAR 3.5**: Guide the cables on the operating column below the toothed belt through the opening on the head plate and fix them to the holders provided using cable ties.
- **MA STAR 5.5 / 6.5**: Guide the cables on the operating column past the toothed belt through the opening on the head plate and fix them to the laser cutout provided in the area of the head plate opening using cable ties. Route the cable further below the head plate into the cable duct of the column. Also attach the fixation to the counter column.

NOTICE

If they are not fixed properly, the cables may be damaged by the toothed belt!

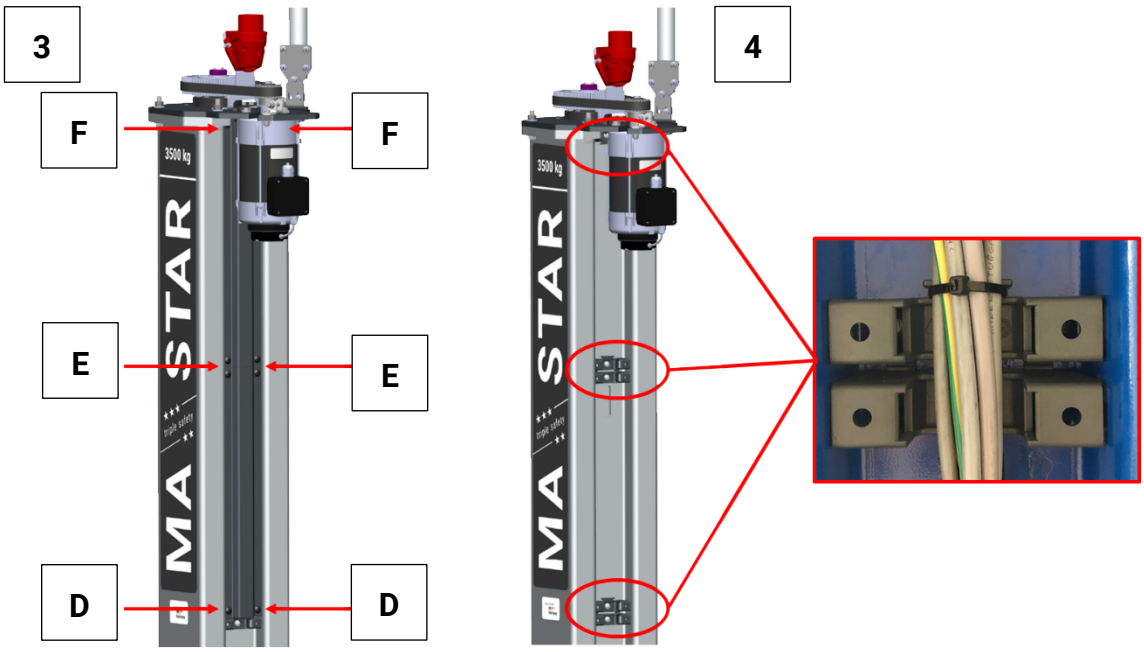

D Screws (2x right) **E** Clip rivet **F** Clips (2x top)

5

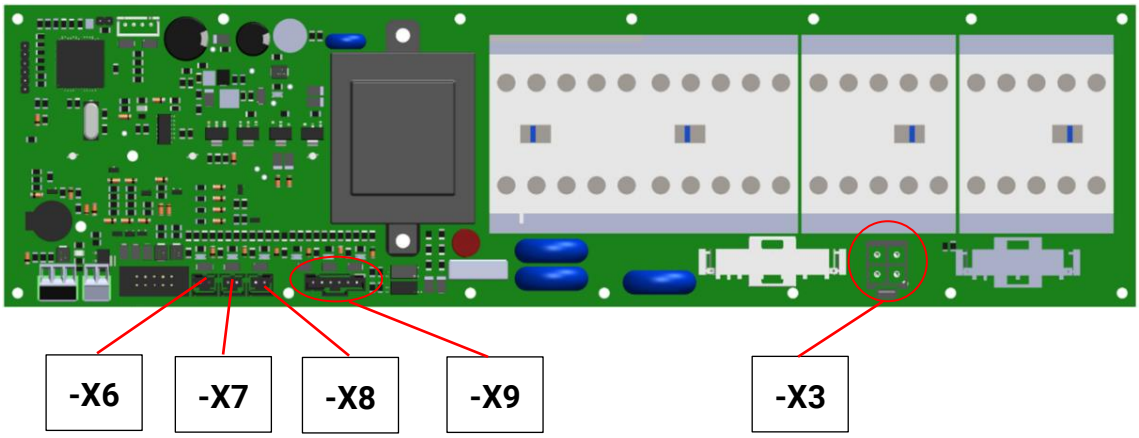

6

2 The operating unit must be dismantled to connect the cables to the control board.
To do this, remove the two left-hand screws and replace them with two M6x80 cylinder head screws (included in the accessory pack) (2a). Screw in the screws until they are level with the surface of the operating unit. Then remove the two right-hand screws and fold the operating unit away to the left into the **service position** (2b).

3 Dismantle the top two plastic covers. To do this, unscrew the clip rivet and pull out the top two clips.

4 Guide the cables through the cable duct to the control panel and fasten them to the brackets with cable ties.

5 Plug the distribution cable of the sensors of the counter column to X9 and the motor of the counter column to X3.

Check whether the sensors of the operating side are mounted correctly. The sensors' cables are marked accordingly. The sensors are correctly wired with the following pin assignment:

- X8 – Black
- X7 - Red
- X6 - Yellow

6 Connect the grounding cable to the flat plug behind the control panel and check that it is firmly seated.

NOTICE

The correct connection of the equipotential bonding is also to be checked on the counter column.

7 Replace the top two covers on the column and install the control panel. Tighten the four screws of the control panel with max. 3.5 Nm.

NOTICE

Ensure that the aluminium bushings are present, otherwise the fastening domes may be damaged!

6.14 Installing the Cover Hoods

MA STAR 3.5

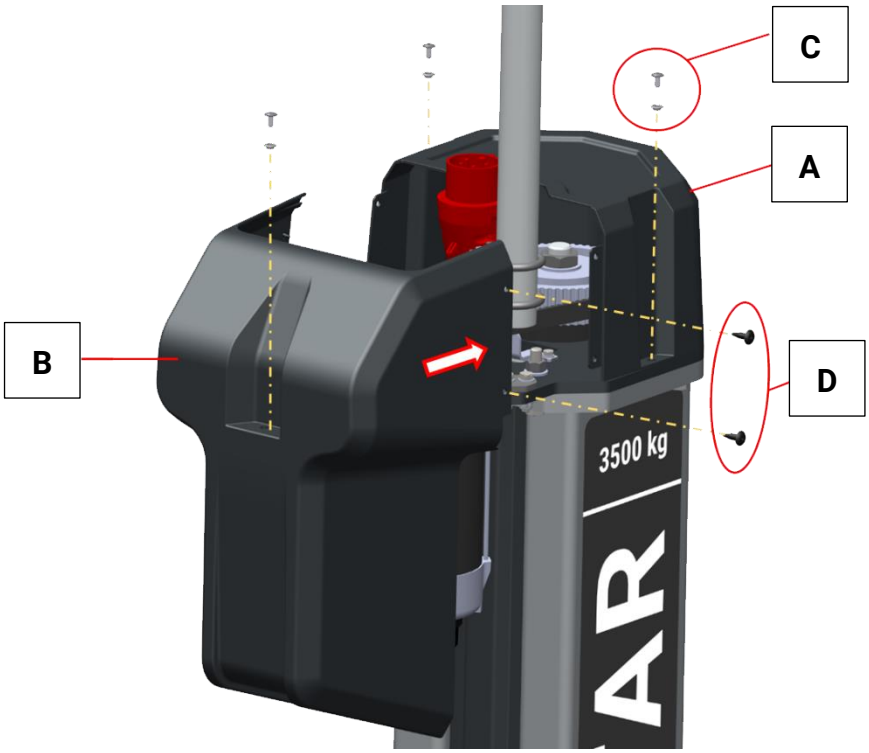

A	Front cover	**C**	Screws, bushings
B	Rear cover	**D**	Clip rivet

Fasten the front and rear covers to the head plate using the enclosed screws and bushings (C) (tightening torque 3.5 Nm). Then connect the front and rear sections with two clip rivets (D) each on the left and right.

MA STAR 5.5 / 6.5

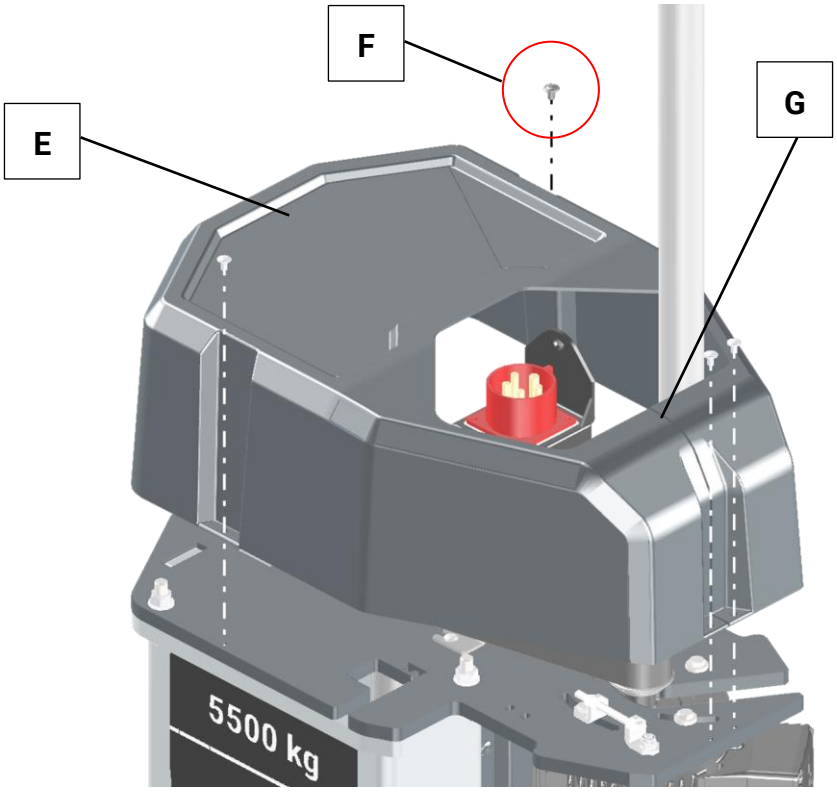

E	Cover	**F**	Screws	**G**	Slot

Fasten the cover to the head plate with the enclosed screws; tightening torque 3.5 Nm. The cover is slotted in the rear area to ensure mounting with the cable bridge already installed.

6.15 Greasing the Lift's Spindle Drive

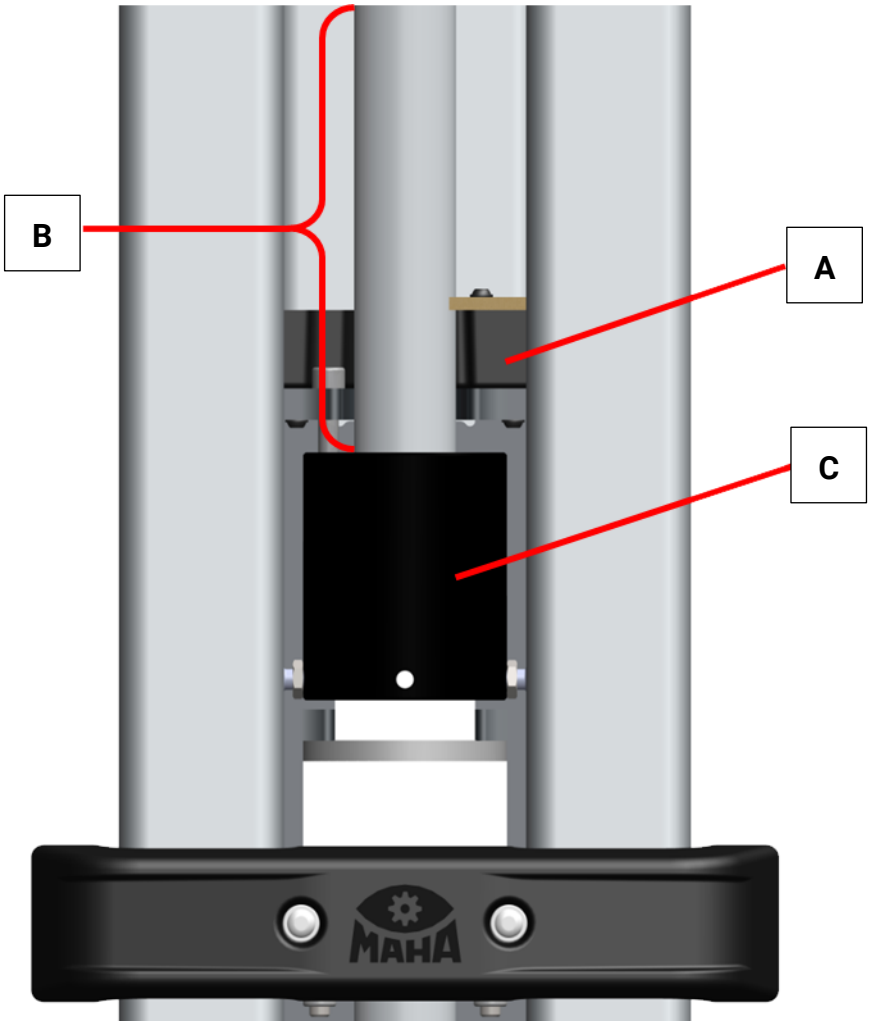

A	Oil pan	**B**	Spindle	**C**	Safety nut

The lift's spindles must be lubricated before use. For this purpose, the enclosed spindle oil, **gear oil SAE 140** (Art. No. 1402567), must be filled into the oil pans of the lifting slides. In addition, the spindle must be lightly oiled in the area approx. 0.5 m above the safety nut.

NOTICE

Only SAE 140 gear oil is permitted for greasing the spindle drive!

6.16 Adjusting the Support Nut's Wear Indicator

WARNING

The correct wear indicator setting is essential for the spindle / support nut system's functionality and safety. If the distance is set incorrectly during commissioning or when installing a new support nut, the support nut wear can no longer be reliably checked during the annual inspection. Safe lift operation would thus no longer be guaranteed.

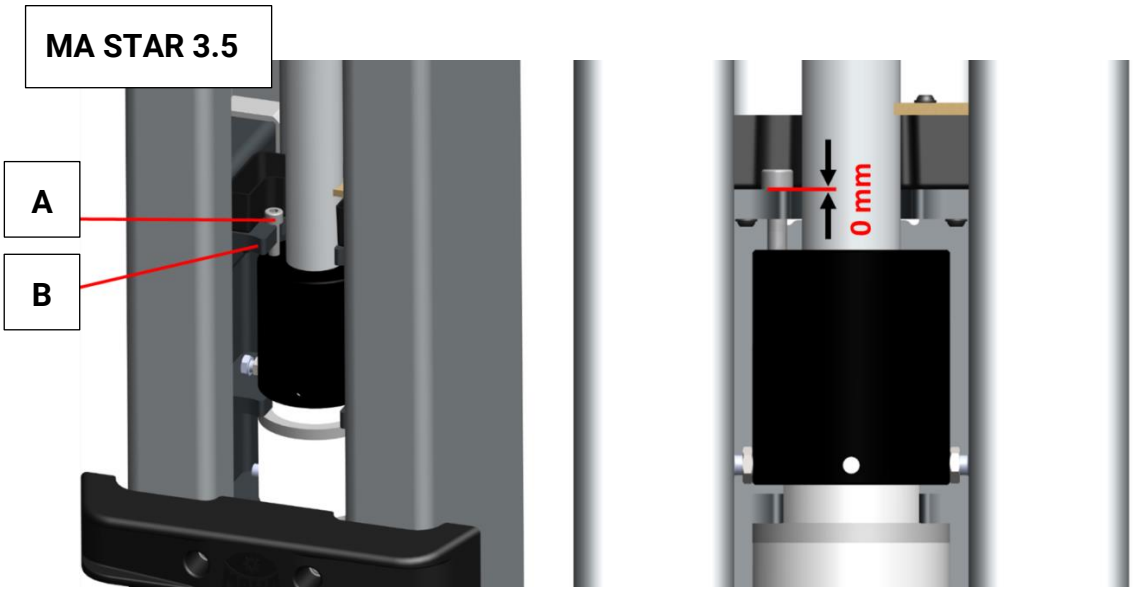

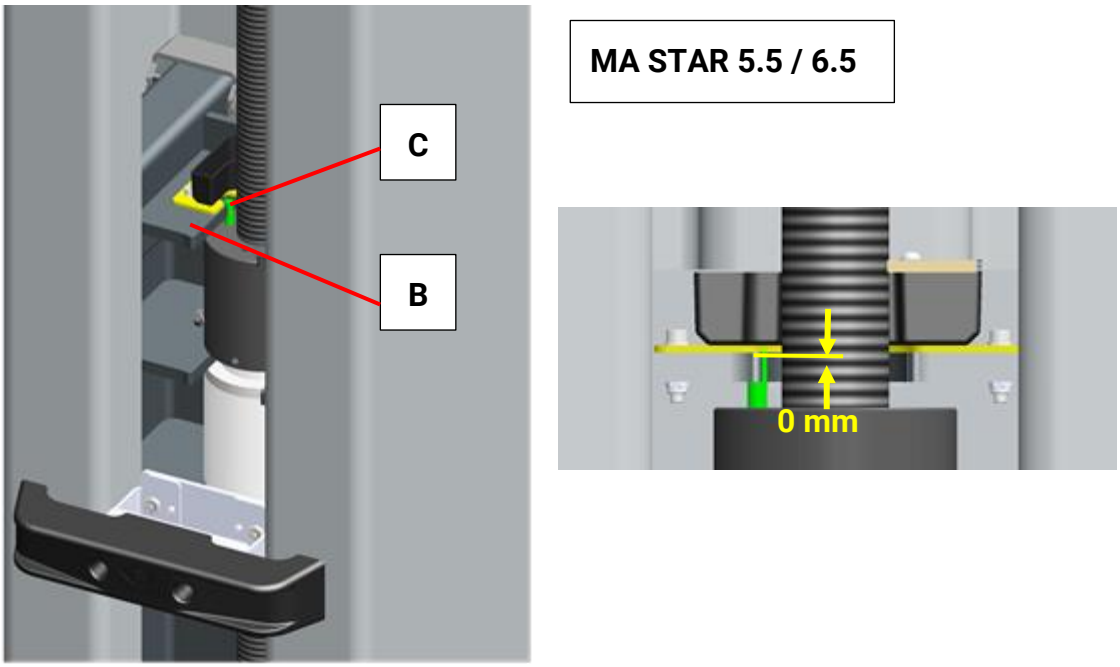

A Cheese head screw M8x45 **B** Support plate **C** Grub screw M8x40

Before putting the lift into operation, check the support nut's wear indicator.

- **MA STAR 3.5**: The M8x45 cap screw must be in contact with the support plate of the lift carriage. If this is not the case, hand-tighten the screw.
- **MA STAR 5.5 / 6.5**: The upper edge of the M8x40 grub screw must be screwed in flush with the support plate.

ATTENTION: If it is necessary to correct the wear screw during installation/commissioning, it must be secured again with threadlocker (medium strength).

NOTICE

The correct setting of the wear indicator with specification of the gap dimension must be confirmed in the inspection book.

6.17 Connecting the Lift to the Power Supply

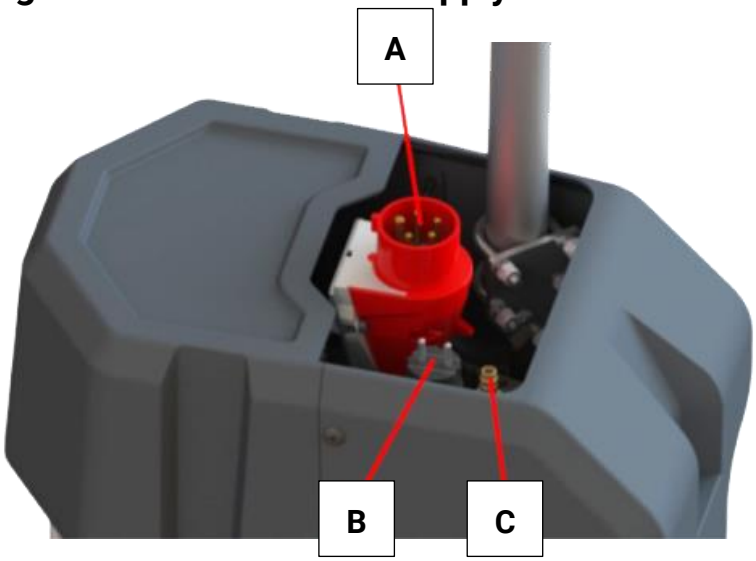

A Main junction box **B** Energy set **C** Compressed air

Mount any accessories before connecting them to the supply voltage.

To connect the lift to the supply line of the workshop, the plug of the supply line on the house side must be plugged into the main connection box of the lift. For connection of the energy set and compressed air, see section “Optional equipment”.

WARNING

For the voltage variants 3x 230 V + 50 Hz and 3x 230 V + 60 Hz, the main connection of the lift is made via a terminal box. The connection may only be carried out by authorized electricians!

6.18 Commissioning the control system

It is only necessary to configure the controller in case of spare parts. See section “Configuring the controller”.

1 Switch on the main switch.

2 All three lights flash:

a. 3 times at: 3 x 400 V + 50 Hz (MA STAR 3.5, standard)

b. 4 times at: 3 x 400 V + 60 Hz (MA STAR 3.5, VZ 990491) 3 x 230 V + 50 Hz (MA STAR 3.5, VZ 990492) 3 x 230 V + 60 Hz (MA STAR 3.5, VZ 990499)

c. 5 times at: 3 x 400 V + 50 Hz (MA STAR 5.5 / 6.5, standard)

3 The UP and DOWN buttons then light up continuously.

4 The lift is ready for operation.

IMPORTANT: If no button or only the DOWN button is permanently illuminated, initial referencing is necessary.

6.19 Installing the Support Arms and Support Arm Locks

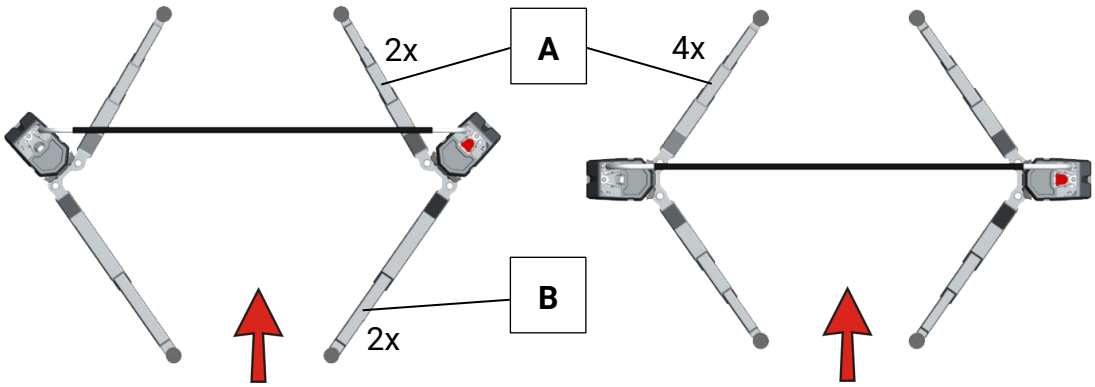

asymmetric symmetrical

Depending on the type of lift, two different support arm sets are supplied. The support arms are to be arranged according to the above diagram.

A Support arm short - double telescopic

B Support arm long - single telescoping

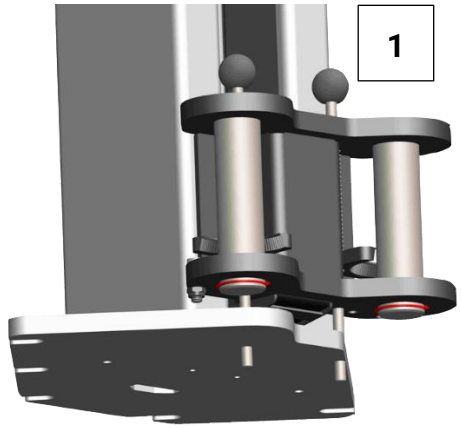
1

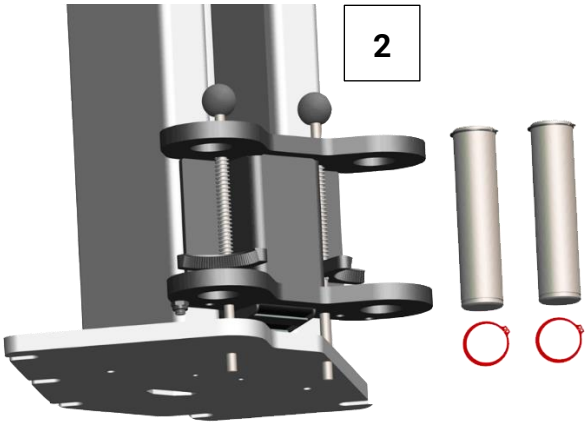
2

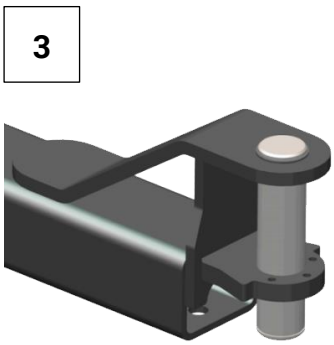
3

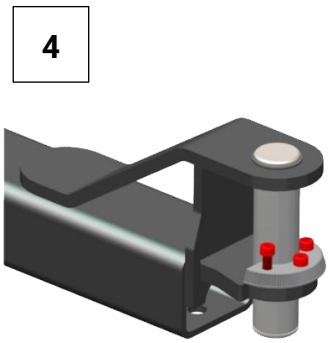
4

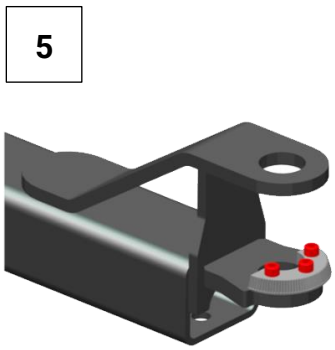
5

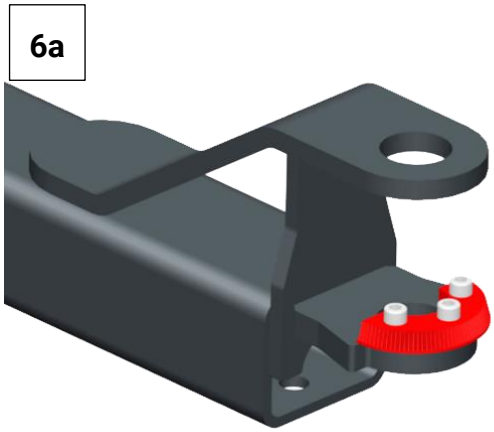
6a

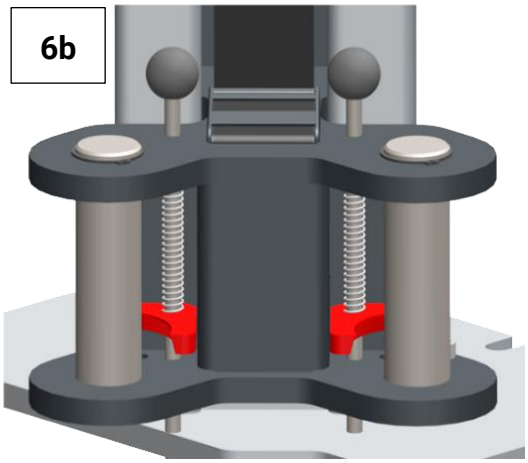
6b

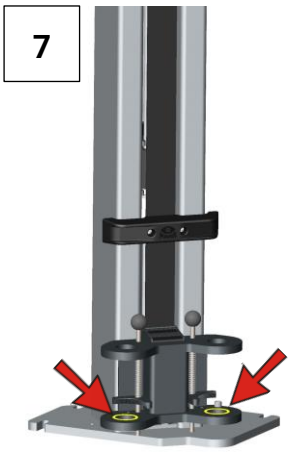
7

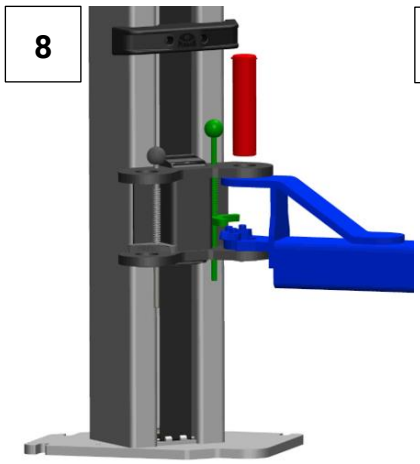
8

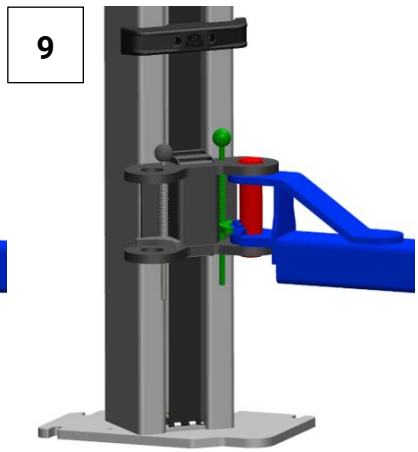
9

To assemble the support arms and the support arm locking device, proceed as follows (for all types):

1 Remove the bottom circlips.

2 Remove the support arm bolts by lifting them up and off the lifting carriage.

3 Insert the support arm bolts into the support arm lugs.

4 Fasten the supplied tooth segments to the lower support arm bracket with three screws and tighten them hand-tight.

5 Remove the support arm bolts and tighten the bolts with a torque wrench.

MA STAR 3.5 and 5.5	3x M10x30-12.9	80 Nm
MA STAR 6.5	5x M12x40-10.9	125 Nm

6 Grease the tooth segments on the support arms (6a) and the lift carriage (6b) on the tooth flanks.

7 Move the lifting carriage to working height.

8 Lift the support arm lock, insert the support arm and secure it with support arm bolts. Make sure that the preinstalled adjusting washer (Fig. 7) is placed between support arm and lifting carriage.

9 Secure the support arm bolts with circlips and check that the support arm lock is working properly.

6.20 Installing the Door Protection Strips

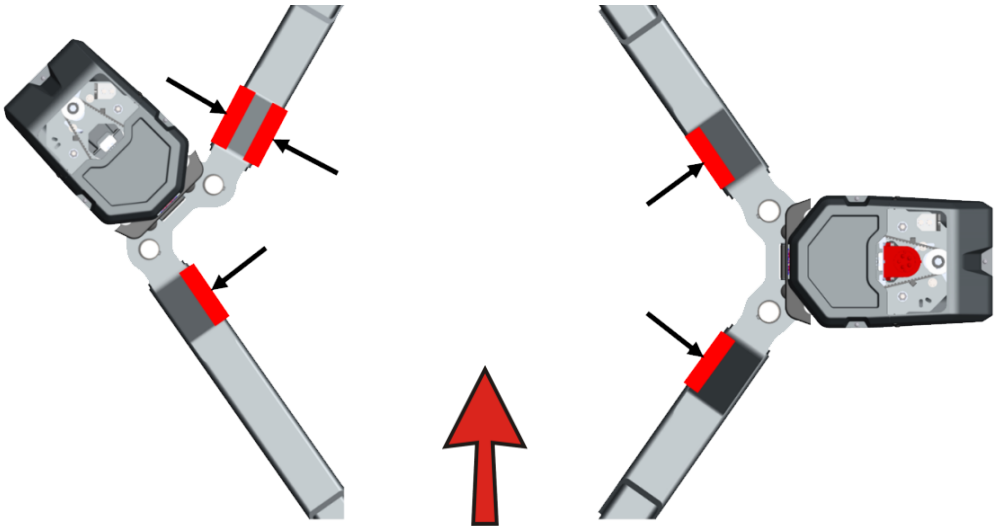

asymmetric symmetrical

Attach the foam protection strips supplied to the support arms as follows:

1 Attach 1 piece per arm to the inner edges of the long support arms.

2 Attach 2 pieces per arm to the inner and outer edges of the short support armsing.

6.21 Setting the Bottom End Position

The height of the bottom end position can be adapted to the conditions of the workshop floor (unevenness, etc.). The bottom limit switch is factory-fitted in the top position. The sensor for the bottom end position is located behind the bottom plastic cover on the column in question. Proceed as follows to adjust the distance between the support arms and the workshop floor:

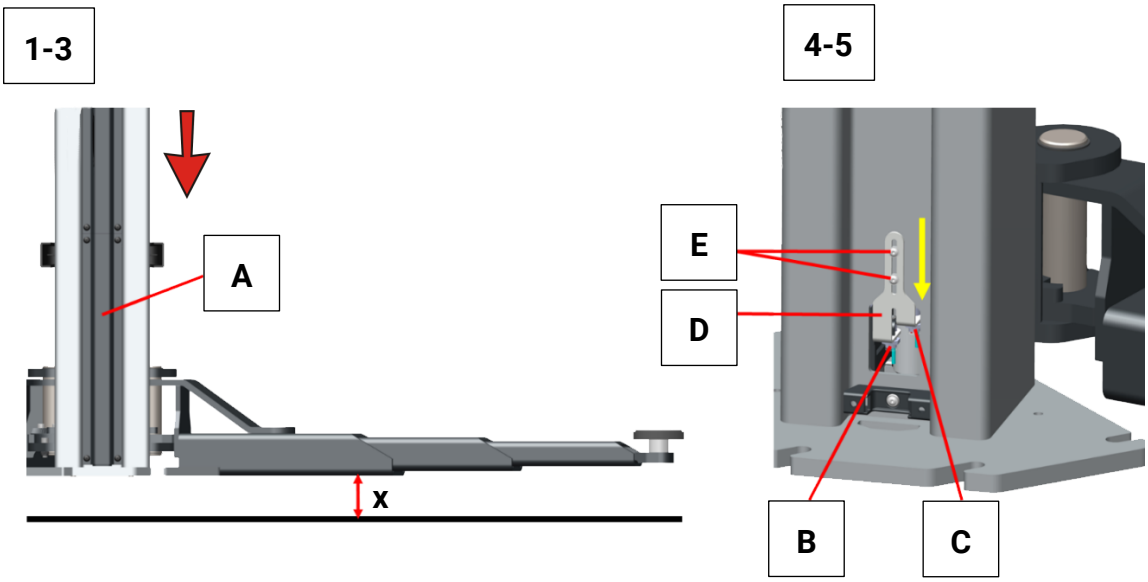

A	Column cover bottom	**C**	“Nut breakage detection" sensor		
B	"Lower end position" sensor	**D**	Sensor holder	**E**	Screws

1 Move the lifting carriage to the bottom end position until shutdown.

2 Measure the smallest distance between the support arms and the workshop floor.

NOTICE

If the support arms are already in contact with the ground, check whether the sensor is already in the uppermost position (see following steps).

3 Remove the bottom cover of the respective column.

WARNING

The distance between the sensors on the sensor holder (see section “Replace sensors and adjust”) is preset at the factory and must not be changed. Safe operation cannot be guaranteed if the distances between the sensors change!

4 Loosen 4 screws of the sensor holder and lower the entire sensor holder by the desired amount.

5 Tighten the screws with 6 Nm and mount the column cover.

6 Check the setting.

6.22 Operational Check

During the acceptance process, the following points must be checked again in particular:

- The lifting columns' alignment and positioning
- The lift's electrical connection
- Potential equalisation between the lifting columns
- Top and bottom proximity switches
- The fastening of the support nuts
- The correct setting for the wear control screw and safety nut
- The lifting spindle is sufficiently lubricated
- All the composite anchors are fixed in place in concrete
- Tightening torques of the fastening nuts
- Protection for the support arm bolts and the support plates
- Complete and backlash-free engagement of the arm lock
- Excavation protection of the support arm extensions
- The lifting carriages are in sync
- The lift is running smoothly both when loaded and when not loaded (approximate nominal load)

7 Optional equipment

7.1 Voltage variants 3x 220-230 V 50/60 Hz

For the voltage variants

- 3x 220-230 V 50 Hz
- 3x 220-230 V 60 Hz

is installed special electric motor with brake. This motor is **always** supplied with delta connection (230 V). If necessary, it can be reconnected to a star connection (400 V) as follows.

WARNING

The electrical circuit may only be reconnected by qualified electricians!

1 Ensure that the system is disconnected from any supply voltage.

2 Open the main junction box on the top of the control column and reconnect it according to the diagram.

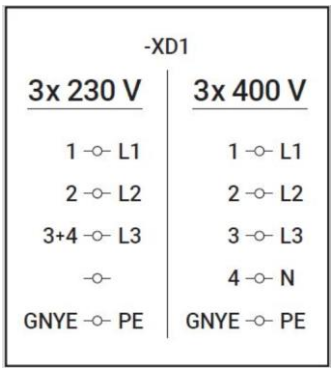

3 Open the terminal box of the motor and reconnect according to the diagram.

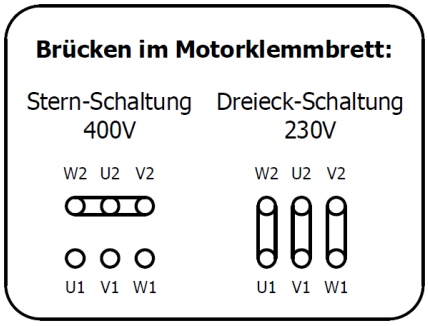

All relevant information on reconnecting the circuit can be found in the electrical circuit diagram **228.01.005823** in the appendix.

7.2 Control unit on counter column

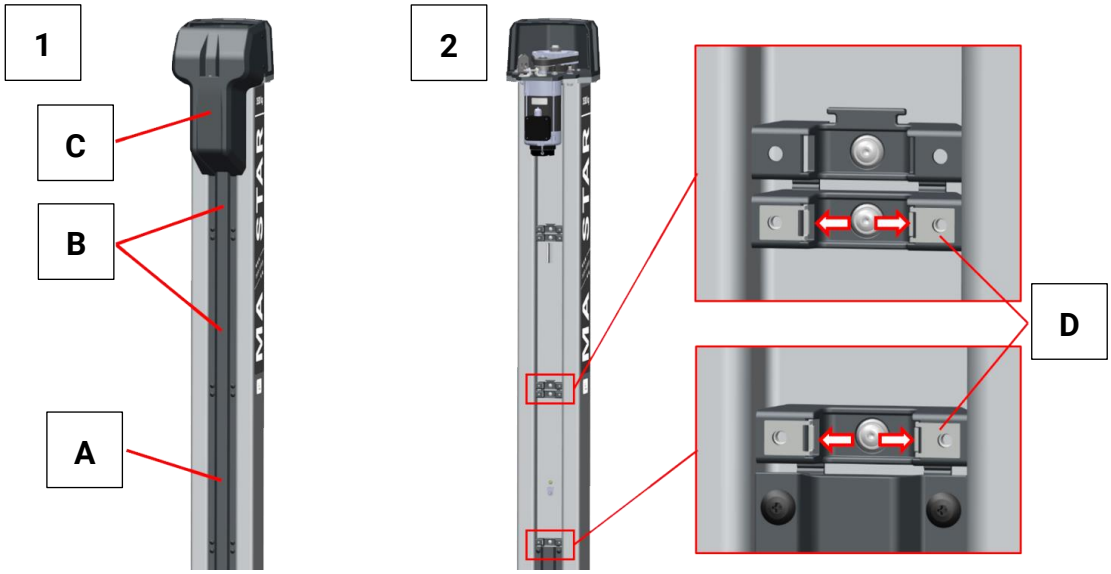

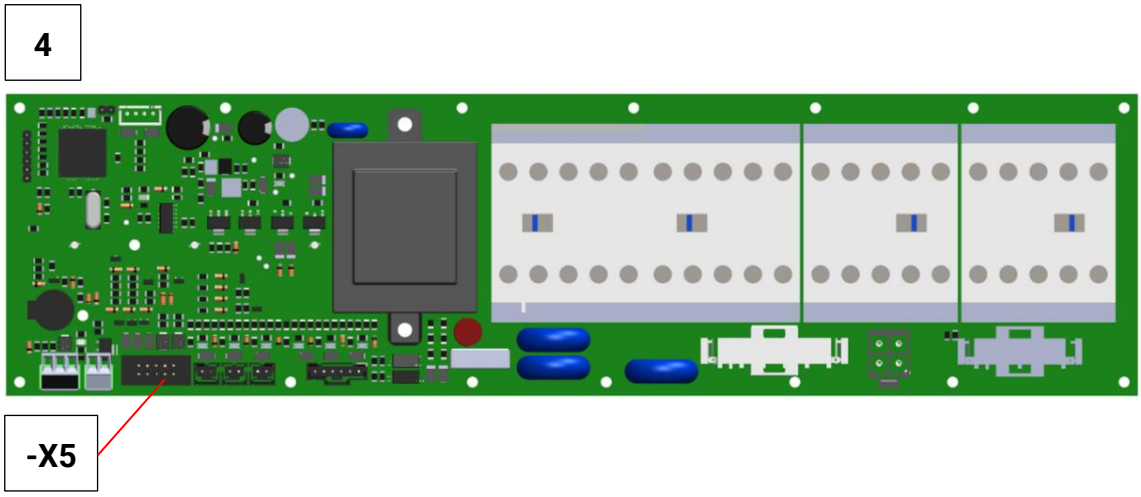

A	Column cover (center)	**C**	Motor cover
B	Column cover (2x top)	**D**	Clip nuts

1. On the counter column, remove the middle and the top two column covers as well as the motor cover. See sections “Electrical connection of the lifting columns” and “Fitting the cover hoods”.
2. On the control column, move the control unit to the service position (see section “The lift’s electrical connection”) and remove the top two column covers (see section “Fitting the cover hoods”).
3. Slide the clip nuts included in the scope of delivery onto the holders of the counter column from the inside.
4. Pull the cable for the additional control unit into the cable duct, see section “Electrical connection of the lifting columns”.
5. Plug the cable on the main board into connector -X5. IMPORTANT: Remove the jumper (-X5 between pin 1 and pin 2) before plugging in!

6 Plug the cable into the additional operating unit.

7 Fix the cable in the cable duct. Refit the covers and operating units. See sections “Electrical connection of the lifting columns” and “Fitting the cover hoods”.

7.3 Energy set on operating and counter column

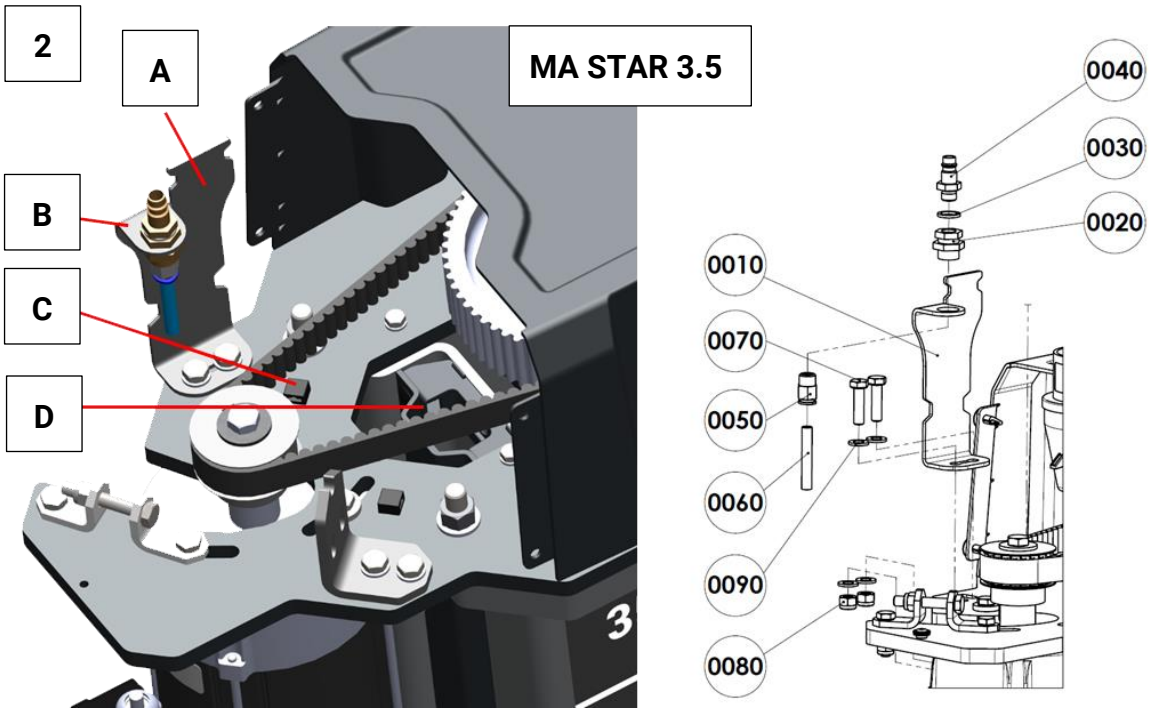

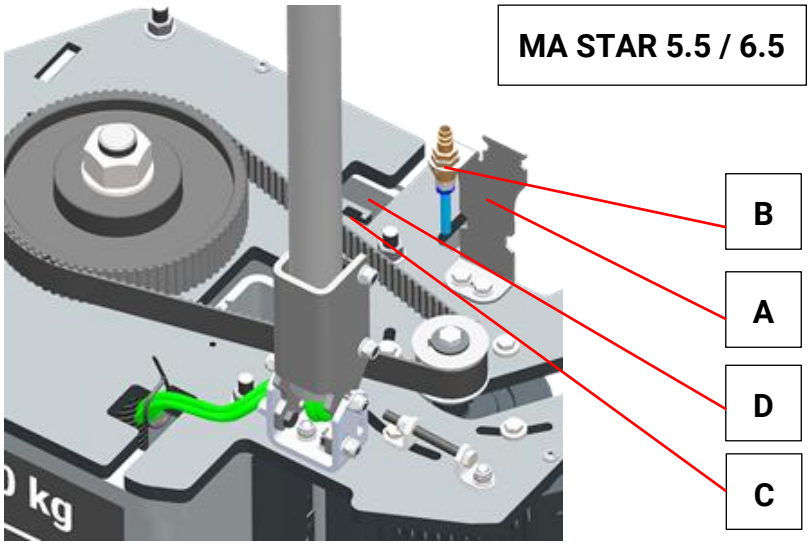

A	Holder	**C**	Cable holder (for cable ties)
B	Connector plug	**D**	Cable duct

WARNING

- The supply line must be provided by the customer. Circuit breaker 16A + RCD (30 mA).
- External voltage! The energy set is also live when the main switch is switched off!

1 Set the control unit on the respective column to the service position and remove the two upper covers of the cable duct and the rear motor cover. See sections “Electrical connection of the lifting columns” and “Fitting the cover hoods”.

2 Mount the holder for the compressed air and power connection on the free hole pattern (opposite the cable bridge) on the head plate as shown. Fasten the connector to the holder with the pins oriented upwards using cable ties.

MA STAR 3.5
Insert the cable and the compressed air hose below the toothed belt from above into the cable duct and guide it to the control panel.
Fix the cable and the compressed air hose to the holder below the toothed belt using cable ties, see also section “Electrical connection of the lifting columns”.

MA STAR 5.5 / 6.5
Guide the cable and the compressed air hose into the still free opening to the cable duct as already shown on the opposite side, see section “The lift’s electrical connection”. Fix the cable and the compressed air hose to the retaining plate using cable ties.

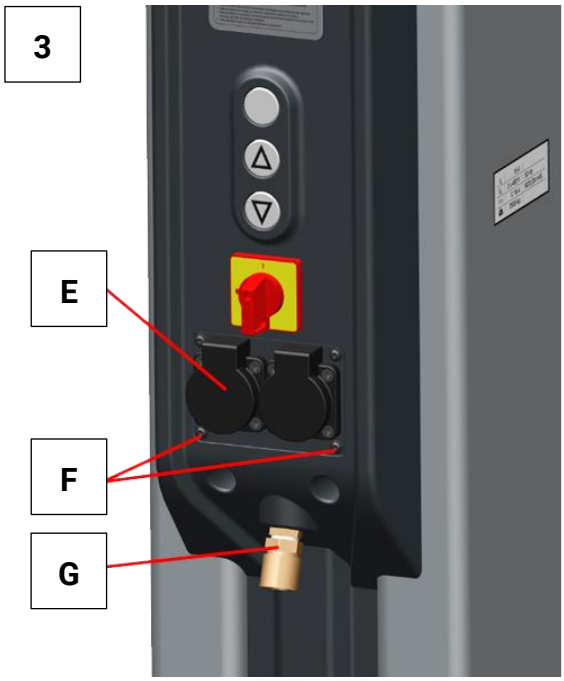

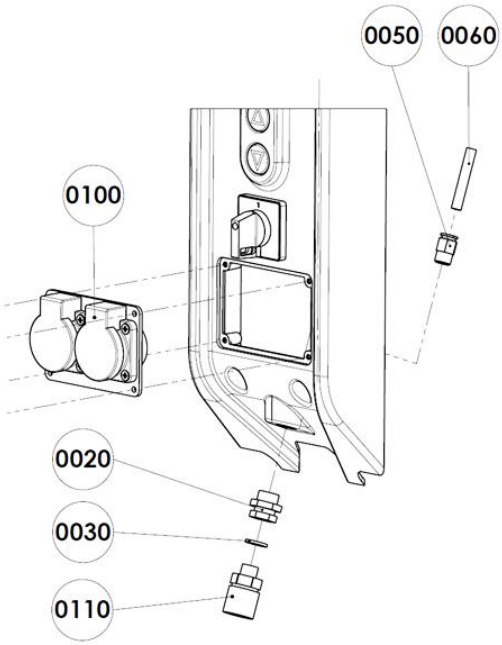

E Socket **F** Screws **G** Compressed air components

Pos.	Description	Art. / Mat. No.
0010	Holder, energy set, Phoenix 3.5t	
0020	Bulkhead push-in fitting, brass	
0030	Poly seal Ø1/4" 2 mm	
0040	Plug nipple	
0050	Straight screw-in fitting	
0060	Hose, PUR calibrated, blue (3 m)	
0070	Hex screw M8×30-8.8	
0080	Hexagon nut, M8-8 self-locking	
0090	Washer A8.4-200HV	
0100	Energy set MA STAR 01	1401701
	Energy set, MA STAR buzzer 01 (only for MB)	1401398
0110	Quick coupling tire. Measuring NW 7	28 8092 0406
	Rectusafe coupling MB (only for MB)	28 8092 0500

3 Remove the cover on the recess on the operating unit and install the preassembled sockets. Tighten the screws with 3.5 Nm.
Assemble the compressed air components as shown.

4 Connect the equipotential bonding on the flat plug behind the operating unit. See section “Electrical connection of the lifting columns”.

5 Fix the cable and hose in the cable duct (see section “Electrical connection of the lifting columns”) and refit the covers of the cable duct, the motor cover and the operating unit (see sections “Electrical connection of the lifting columns” and “Fitting the cover hoods”).

6 Connect the power and air supply to the head plate.

7.4 Door stop protection for lift carriage (MA STAR 3.5 only)

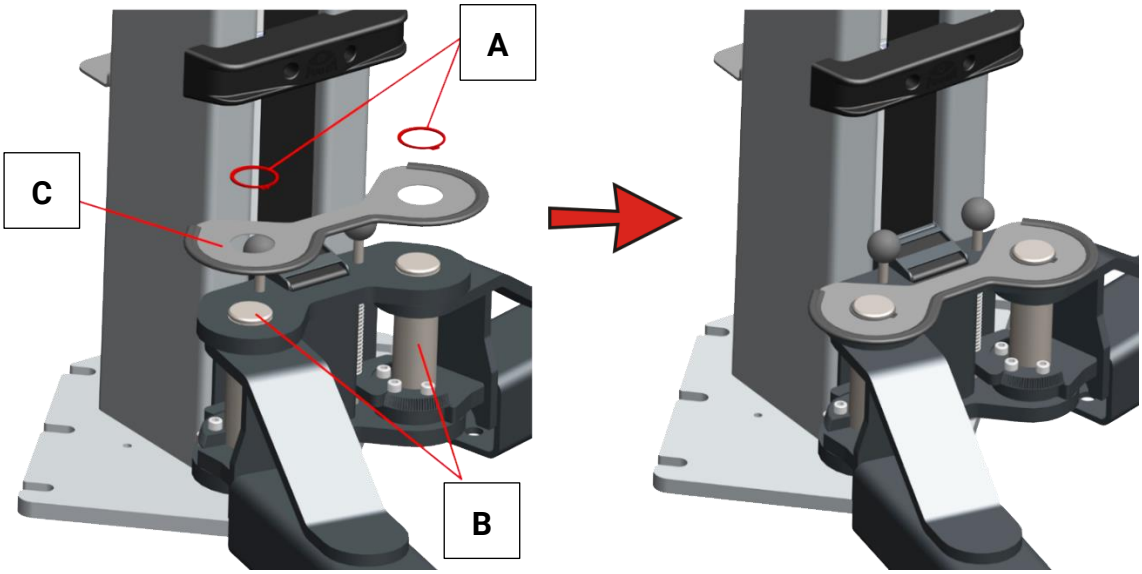

A Circlips, top **B** Support arm bolt **C** Door stop protection

NOTICE

Before removing the retaining rings, secure the support arm bolts against falling out!
The door stop protection reduces the clearance width by 35 mm.

1 Remove the upper retaining rings of the support arm bolts.
2 Fit the door stop protection on the support arm bolts.
3 Mount the circlips.

7.5 Column Attachment Parts

Various accessories are available for the MA STAR two-post lift. The options

- Bracket for pickup elevation (2 pieces)
- Document holder
- Impact wrench holder
- Energy block

are attached to the fasteners for the cover of the cable duct.

7.5.1 Holder for mounting elevation / document holder / impact wrench holder

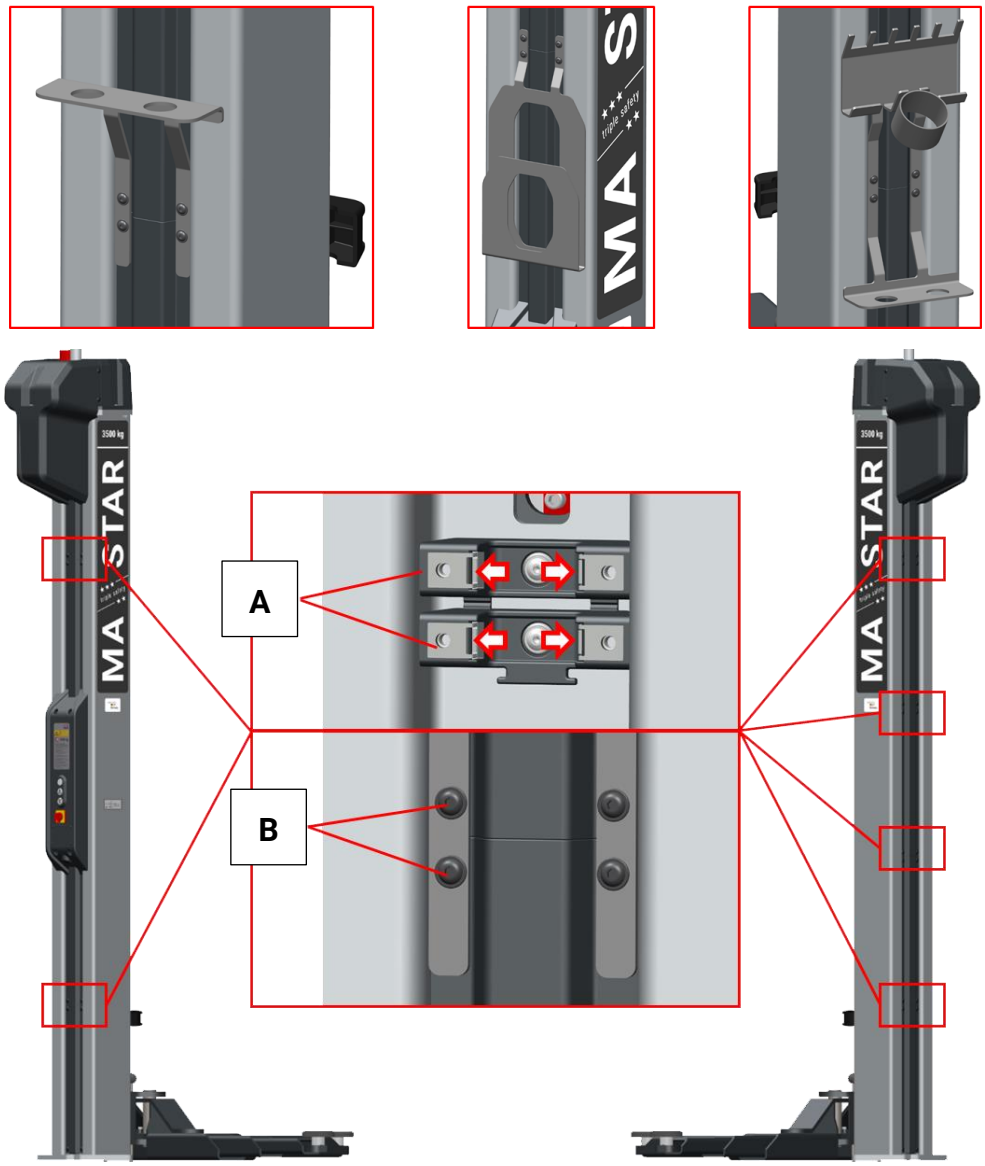

A Clip nuts **B** LFK screws M6x20

Above options are fixed to the butt of the cover with four screws. The holder of the energy block, on the other hand, extends over a complete cover element (see below).

The mounting of the attachments is identical and follows this scheme:

1 Dismantle the covers at the desired location (it may be necessary to dismantle the operating unit for this purpose, see section “Electrical connection of the lifting columns”).

2 Place clip nuts on the holder of the covers.

3 Mount the covers again.

4 Screw the holder from the outside with LFK screws M6x20. Torque 3.5 Nm.

7.6 Energyblock

WARNING

The energy block is supplied with external voltage / external power supply and is energized even when the main switch is switched off.

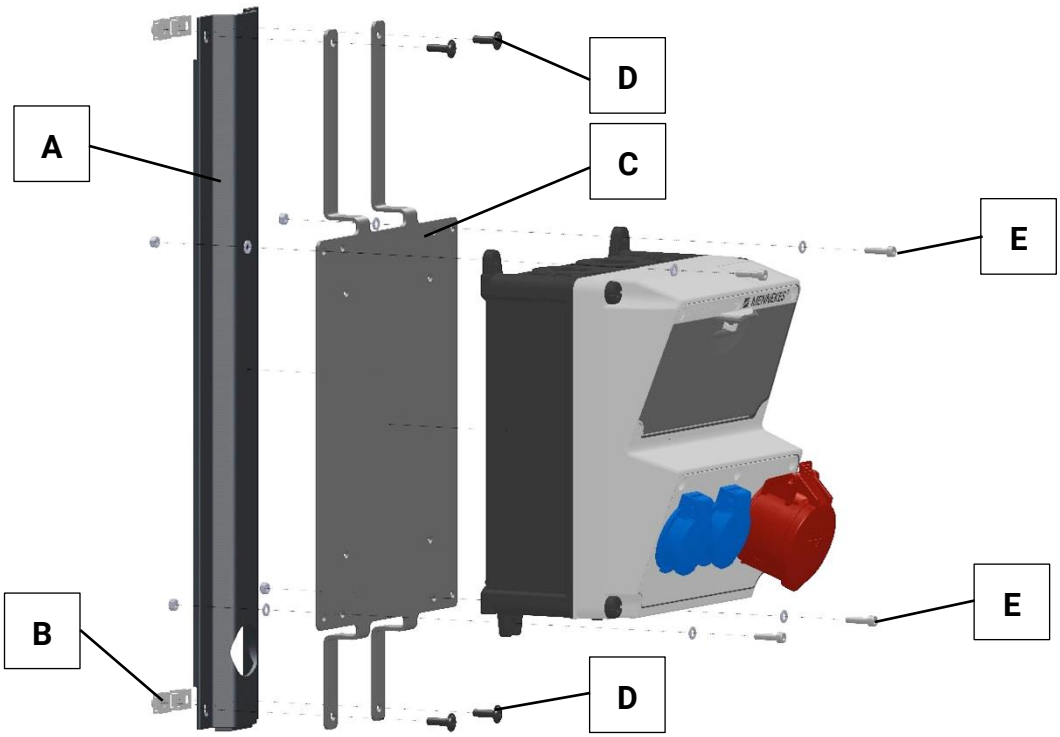

A	Cover cable duct	**B**	Clip nuts	**C**	Mounting plate
D	Flat head screws M6x20	**E**	Cylinder head screws M5x20		

The power block carries two 230 V Shock-proof sockets and one 16 A CEE socket. Fuses are installed for the three sockets and an RCD 30 mA.

The supply of the connecting cable and the introduction into the E-block can be freely selected.

1. MAHA recommends the supply line from above in the cable duct on the back of the column and the introduction into the energy block from below. To do this, loosen the clip nuts of the cover and remove the cover profiles. The cable must then be routed from above to approx. 30...50 cm below the bottom edge of the energy block.
2. After removing the covers, guide the cable down in the cable duct and fix the supply cable to the holders of the cover.
3. At the desired position of the energy block, slide the clip nuts over the holder.

4 Close the cable duct again. At the level of the position of the energy block, attach the retaining plate and the cover at the same time and fasten both with the Flat head screws M6x20.

NOTICE

Do not cut off the cover, otherwise it can no longer be fastened!

5 Create an opening on the cover of the cable duct below the energy block for the cable to pass through (cut out, drill).

6 Screw the E-block onto the retaining plate that has just been fixed.

7 The supply cable must be connected by a qualified electrician.

7.7 Ceiling light barrier

WARNING

Power supply of the ceiling light barrier 230 V AC. Connection only permitted by qualified electrician.

In case of low ceiling heights, shortened cable bridges, high vehicles, or to generate additional safety, a ceiling light barrier can be retrofitted to avoid damage to the vehicle and possibly a dangerous situation.

The ceiling light barrier is to be fixed to the hall ceiling with the supplied fixing material. Make sure that any sunlight does not hit the reflector. Mount the reflector with its back to the sun if possible.

If the transceiver unit or reflector is mounted so that the light beam is diagonally above the vehicle to be lifted, vehicle superstructures (roof racks, roof boxes, etc.) are also most likely to be detected.

If the ceiling light barrier is triggered during operation, the lifting movement stops and the lift can only be moved away downwards. The behavior of the ceiling light barrier is identical to reaching the upper end position.

If the ceiling light barrier is triggered without the light beam being interrupted, the reflector and/or the lens may be dirty. In this case, clean the ceiling light barrier with a cloth.

Procedure:

1 Lead the connection cable of the transceiver unit to the main operating side.

2 Connection of the ceiling light barrier by a qualified electrician according to the circuit diagram.

7.8 Support disc raisers

WARNING

- Only **one** elevation may be used per mounting plate. If mounting plate elevations are combined, there is a risk of instability and thus a vehicle crash.
- The anti-rotation lock, which consists of a groove pin and a dowel pin inserted into a sleeve, must always be engaged.

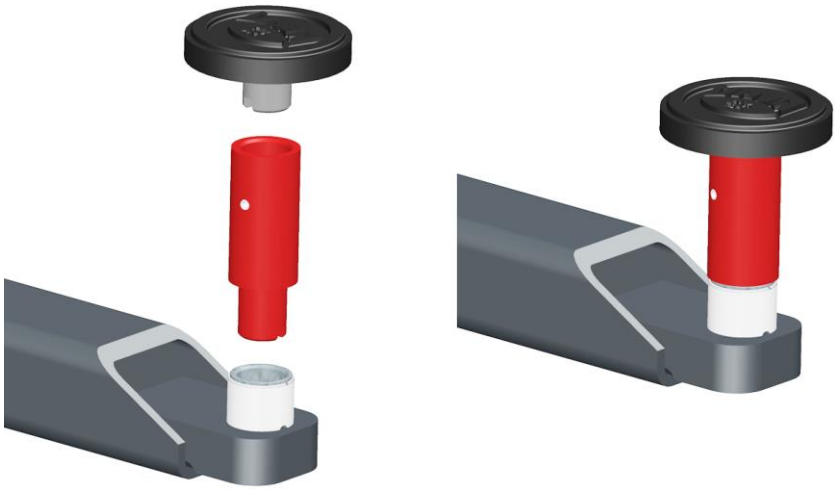

The pick-up plate elevation (partially optional) is available in lengths of 50 mm, 100 mm, 150 mm, 200 mm and 300 mm.

By inserting the support disc raisers, the support discs can be adjusted in increments of 50 mm. Fine adjustments are possible by turning the support disc.

7.9 Wheel engaging supports (MA STAR 5.5 and 6.5 only)

The MA STAR 5.5 and 6.5 can be equipped with wheel engaging supports as an alternative to the disc supports.

The lift is designed according to EN 1493, which specifies a total load capacity and takes into account an asymmetrical load distribution. When using the wheel engaging supports, it should be noted that the vehicle weight with asymmetrical load distribution is no longer decisive, but the individual load-bearing capacity of 1,000 kg per wheel engaging support:

- **Maximum wheel load 1,000 kg**

For the conversion, remove the threaded sleeves and install the wheel engaging supports as shown below.

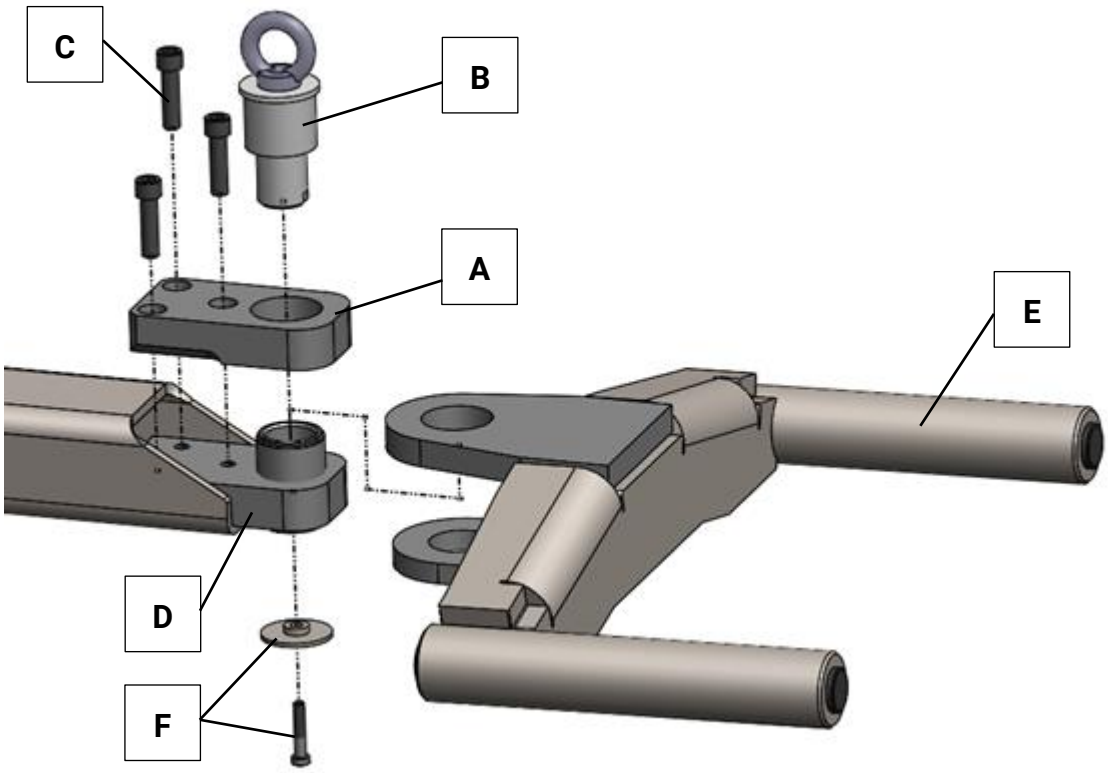

A	Guide plate	**D**	Threaded sleeve
B	Support pin	**E**	Wheel engaging fork
C	Fastening screws M12x45 10.9	**F**	Fastening screw with washer

NOTICE

Lightly grease the sliding surfaces before mounting the wheel engaging supports.

1. Screw the support disc all the way down (protruding at the bottom) and remove it.
2. Position the guide plate (A) and insert the support pin (B).
3. Screw in fastening screws (C) and tighten them hand-tight. Make sure that there is no tension between support pin and guide plate.
4. Torque the screws to 120 Nm.
5. With the support pin inserted, turn the threaded sleeve (D) upward until it is flush with the guide plate.
6. Pull the support pin and fit the wheel engaging fork (E).
7. Fully insert the support bolt and turn it down completely.
8. Secure the support pin with the fastening screw and washer (F).

7.10 Mount roller support for support arm pullouts (MA STAR 5.5 / 6.5 only)

Roller supports for the support arm extensions are only available for the MA STAR 5.5 and 6.5. If so ordered, the support arms are delivered with mounted roller support. In principle, retrofitting is also possible. In this case, the installer must cut the appropriate fastening threads, as only the core holes are made in the standard version.

Procedure:

1 Remove the support arm from the lift (recommendation).
   - Raise the lift to an ergonomic working height (1...1.2 m).
   - Remove the lower circlip from the support arm bolt, pull out the bolt upwards.
   - Place the support arm on the worktable/tool trolley/workbench.

   Tool: Snap ring pliers, rubber mallet, hoist for support arm

2 Dismantle the locking screw (anti-lift device) in the support arm (loosen the lock nut and unscrew the cap screw completely downwards).

   Tool: Allen wrench SW 8; open-end wrench / box wrench SW 17

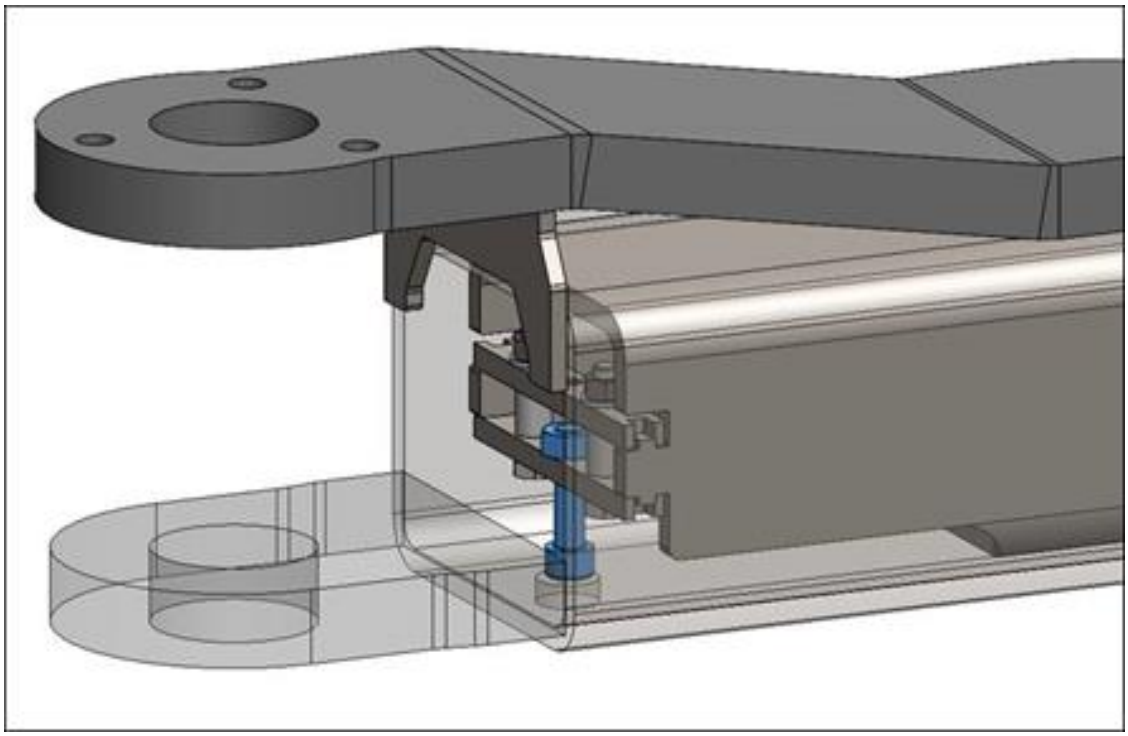

3 Remove the front support arm segments to the front by lifting them slightly out of the arm holder.

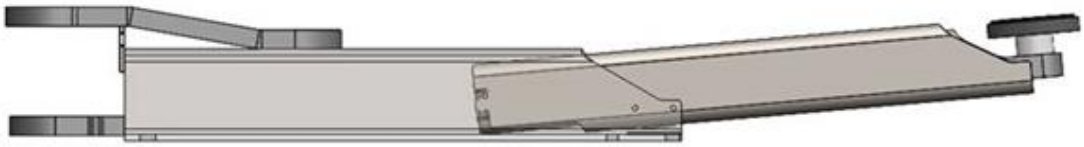

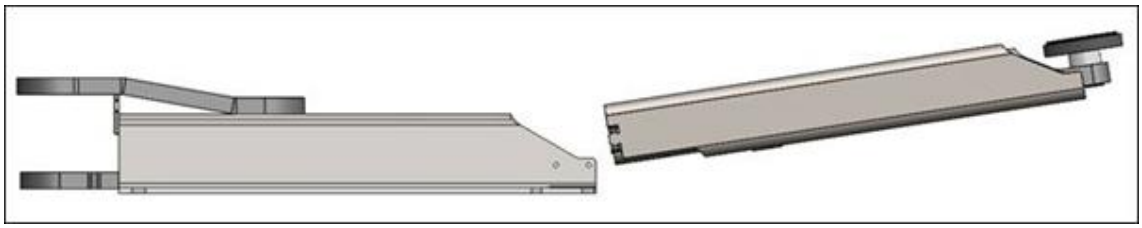

4 Mount the internal bearing.

- Remove the crosshead. The upper crosshead is no longer needed and is replaced by the new roller bearing mount.

  Tool: 2x open-end wrench / box wrench SW 17

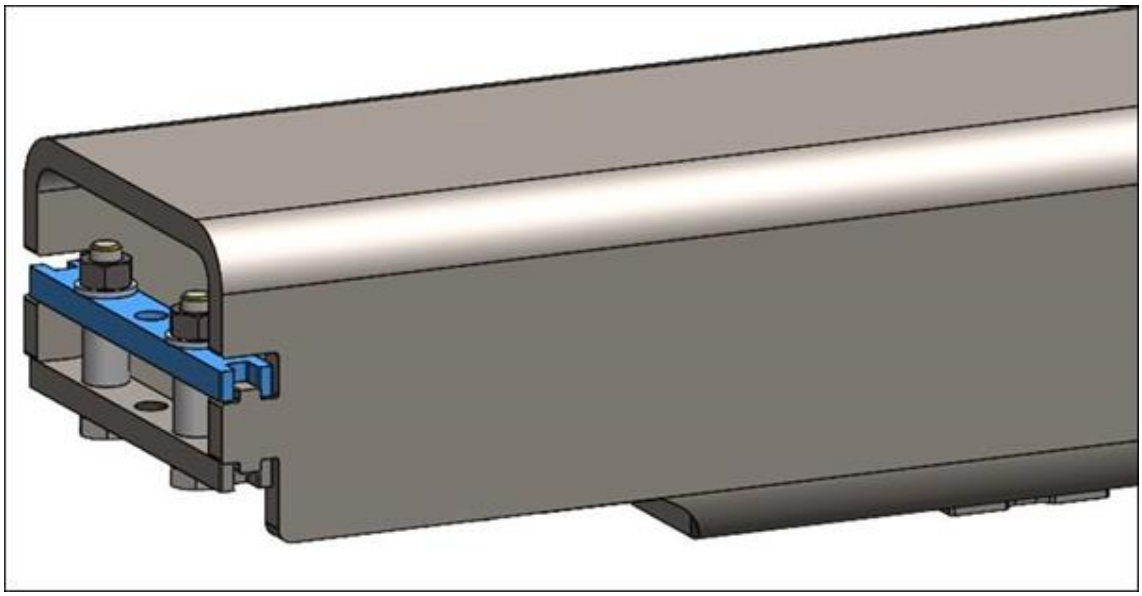

- Mount receptacle (roller bearing).
  Tool 2x open-end wrench / box wrench SW 17

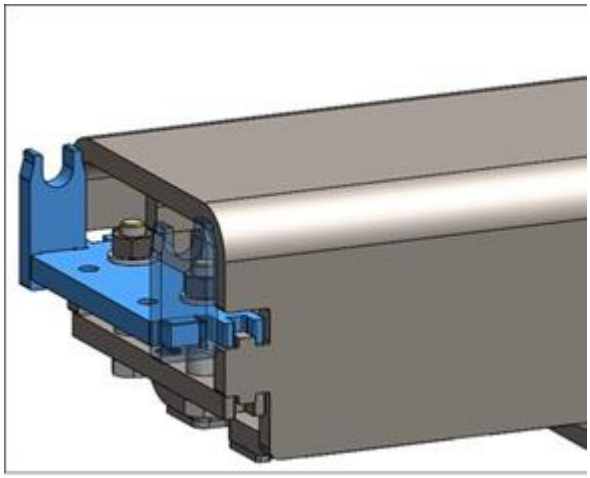

- Mount and adjust axle, needle bearings and springs.
  The spring preload can be increased by the number of washers (2...3 pieces per side recommended).
  The max. deflection/end position of the roller bearing can be adjusted by tightening the M6 cap screws.
  The roller bearing must be adjusted so that the needle bearings project 0.5...1 mm (dimension X, see Fig.) beyond the tube.
  IMPORTANT: Secure cap screw with threadlocker (medium strength).

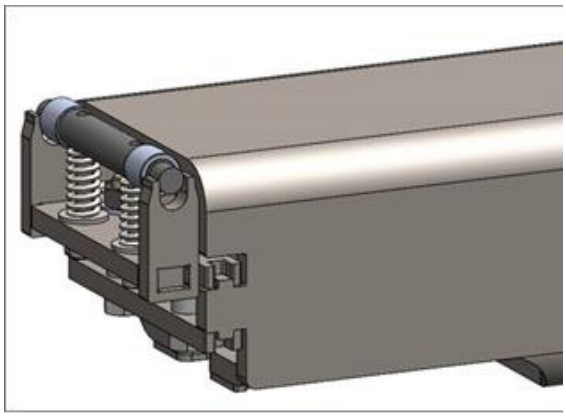

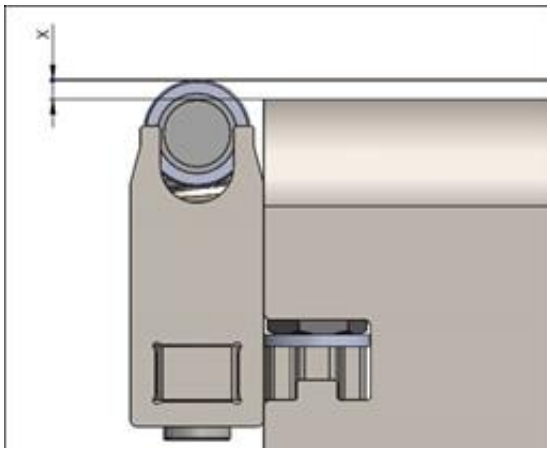

5 Mount the external bearing.

- Mount roller bearing holder on support arm and pin in place.
  IMPORTANT: The 6 mm dowel pin may only be driven in completely on one side at this time. Finish pinning only one side of the roller bearing holder with arm support.
  drive in 6 mm dowel pin max. flush; the dowel pin must not protrude on the inside of the tube/arm support, otherwise the center pull-out will be damaged.
  The final assembly of the covers takes place only after pinning.

  Tool: Allen key SW 5, HSS twist drill 6 mm with drill/accumulator screwdriver, steel hammer.

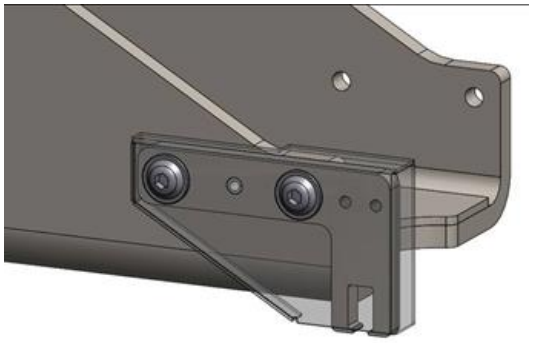

- Mount the springs of the roller bearing.

  Tool: Allen wrench SW 3.

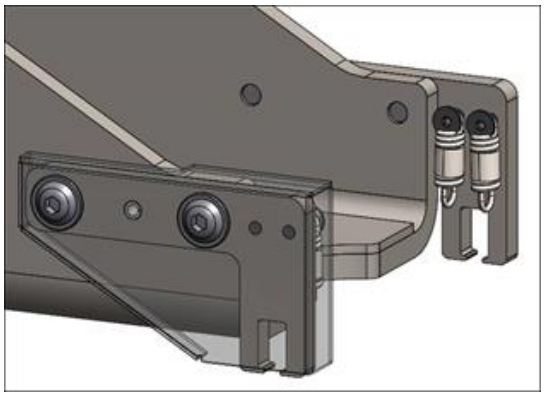

- Pre-assemble the axle of the roller bearing.
  IMPORTANT: Screw in M5 grub screws max. flush, must not protrude.

  Tool: Allen key SW 2.5, light steel hammer, pin punch.

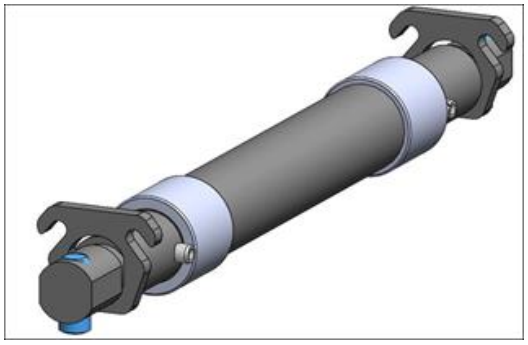

- Mount the bearing on the support arm.
  Insert pre-assembled axle, hook in springs and mount second roller bearing holder (with dowel pin and cover final) to arm mount of support arm.

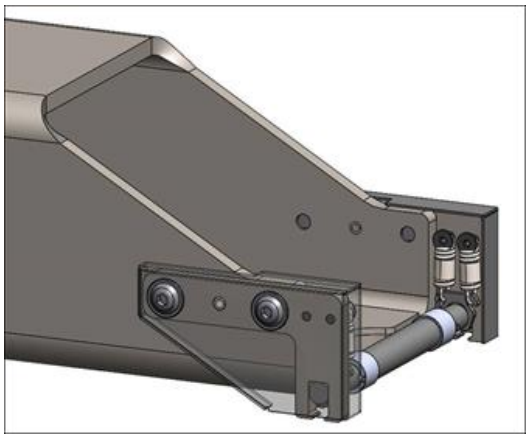

6 Thread/insert the front support arm segments back into the arm holder from the front.

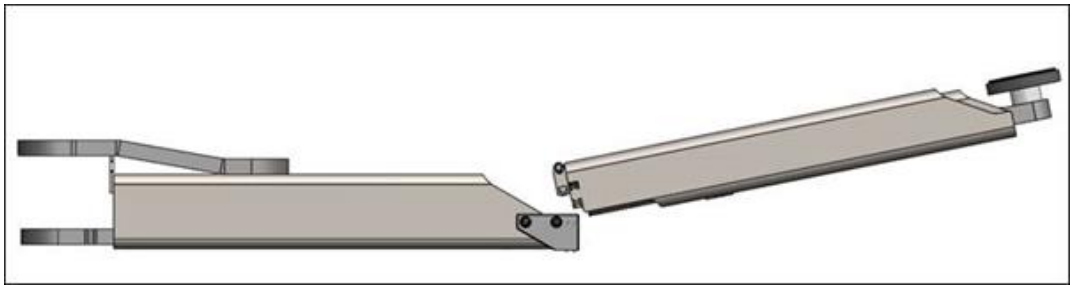

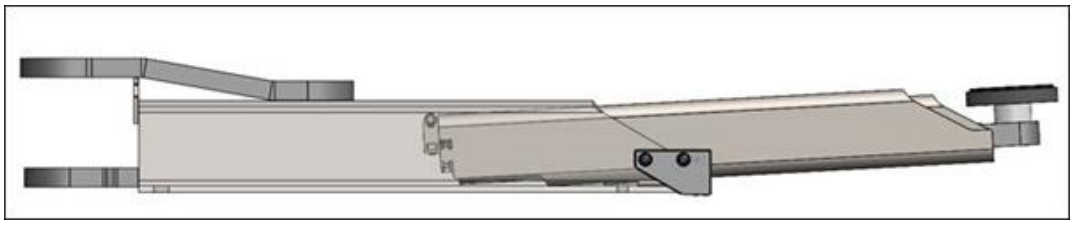

7 Final adjustment of the height of the front roller bearing.

- Retract arm completely.
- Adjust the M5 grub screw so that the center pull-out is floating (raised, but not in contact with the top). The gap dimension at the top between the arm support and the center pull-out should be 0.2...0.5 mm.

Tool: Allen wrench SW 2.5

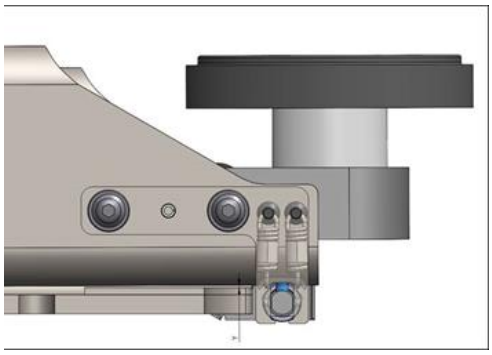

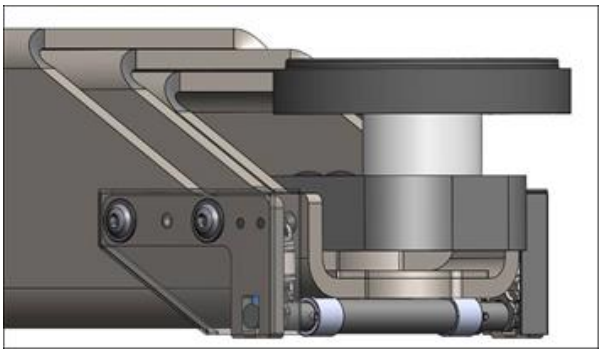

8 Function test

- Check the pull-out for ease of movement.
- Needle bearings must rotate with the center slide when it is pushed in and out.
- Center slide must not touch top/bottom or left/right (protruding dowel pins, screws, etc.), readjustment/reworking may be necessary.

9 Refit the locking screw (anti-lift device) removed in step 2.

- For the correct setting, see also section “Excavation protection of the support arm extensions”.
- Check function, locking screw must not touch.

10 Mount the support arm on the lift carriage again.

- Insert bolt.
- Mount circlip at the bottom.

Tool: Hoist, rubber mallet, snap ring pliers

8 Operation

8.1 Safety Instructions

WARNING

- Observe the detailed operating instructions.
- Comply with legal accident prevention regulations.
- Wear personal protective equipment.
- Perform a visual and functional check before starting work each day (see section “Semiannual exams”).
- Defects must be corrected immediately in a competent manner.
- The permissible load capacity according to the type plate must not be exceeded.
- Only vehicles suitable for the lifting equipment due to their shape and the positioning of their pick-up points may be lifted.
- Operation of the lift is only permissible with mounted and intact protective covers and safety devices.
- Never touch moving parts.
- Never use additional lifting gear for an already raised load.
- Before driving a vehicle onto the lift, the support arms must be in their lowered starting position and moved backwards completely. Otherwise damage to the equipment may occur.
- Driving onto the lift should be at walking pace only and as close to the centre of the columns as possible.
- Vehicles may only be lifted with support arm locks intact and undamaged support discs. Risk of vehicle falling and causing personal injury.
- Support disc raisers may only be used in their single form. A combination of support plate elevations per support plate/arm is not permitted.
- Maintain a safe distance from the vehicle and lift in all directions.
- Keep the movement range of the load and lift free from obstacles. Use a guide if visibility is restricted.
- Vehicles doors must be closed during lifting and lowering.
- The vehicle can be strapped to the lift if necessary. Shifts in the centre of gravity of the vehicle through installation/removal of heavy vehicle parts may otherwise lead to the vehicle sliding off.
- After raising just off the floor, check that the vehicle has been picked up securely and that the support arms are locked correctly. If necessary, lower the vehicle and pick up again.
- The transport of passengers is prohibited.
- Climbing up the lifted vehicle or the lift is prohibited.
- There should not be any people or objects within the safety zone of the lift

and the load during the lifting and lowering process.

- Monitor the load and the lift during lifting and lowering. In the event of an irregularity, the emergency stop button (main button on the main operation column or the emergency stop button on the second control unit on the opposite column), must be pressed immediately.
  ATTENTION: The 230V plug sockets on the operation unit(s) still carry power even after the system has been switched off!
- There is a risk of tripping on floor-mounted lifting equipment and on the foundation anchor of the lift.
- Parts must not be placed on the lift or the vehicle to be lifted.
- Keep the lift and the working area clean. **ATTENTION:** Risk of slipping on oily surfaces!
- Protect all parts of the electrical system from moisture.
- Be careful when running vehicle engines. **ATTENTION:** Risk of poisoning!
- Changes to or overriding of the safety features installed is prohibited!
- Inching mode should be avoided to prevent the motor from overheating. Instead, drive briskly through.
- During work breaks and at the end of the working day, the system must be switched off and secured against unauthorised use.

8.2 Operation and Operating States

The lift has been fitted with an intuitive operating system. Depending on the operating status, illuminated buttons provide a visual indication of the lift's available options regarding direction of movement.

Status	Lift switched off	When switching on the lift	Only lifting possible	Lifting and lowering possible	Only sinking possible	Fault, lift not ready for operation
Visual indicator		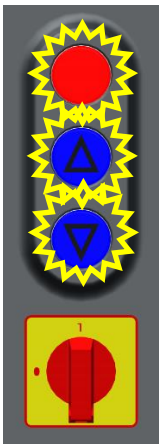				
Cause		3x flashing → 3.5 t 400 V 50 Hz 4x flashing → 3.5 t 230 V 50 Hz *or* 3.5 t 230/400 V 60 Hz 5x flashing → 5.5 t / 6.5 t 400 V 50 Hz	– start position – obstacle met	– when lifting and lowering	– max. lifting height reached – height limit light barrier reached - Overload/ heavy running	- see section "Fault table"

8.3 Preparing the Lifting Operation

8.3.1 Establishing Operational Readiness

MA STAR 3.5 A **MA STAR 3.5 S / 5.5 /6.5**

- The main switch must be at position 0.
- The lift must be lowered all the way down.
- The support arms must be pivoted completely away from the working area (start position, see diagram.).

8.3.2 Positioning the Vehicle

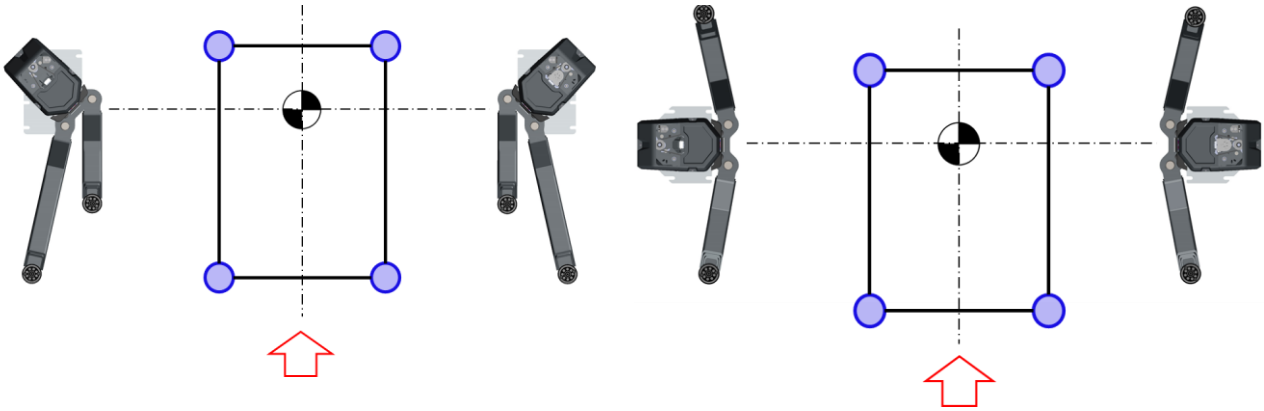

MA STAR 3.5 A **MA STAR 3.5 S / 5.5 / 6.5**

- Carefully drive the vehicle forward and centrally between the lifting columns and secure it against rolling away.
- The centre of gravity of the vehicle should be as central as possible between the lift columns.
- Tip: If it is necessary to open the doors completely, the vehicle can also be positioned backwards between the lift columns.
  IMPORTANT: Again, ensure that the vehicle's centre of gravity is as central between the two lift columns as possible!

8.3.3 Positioning the Support Arms and Pick-up Plates

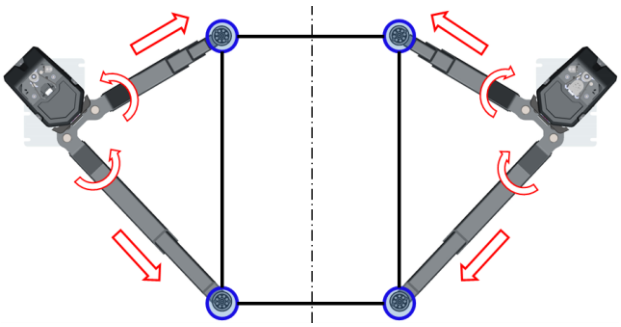

MA STAR 3.5 A

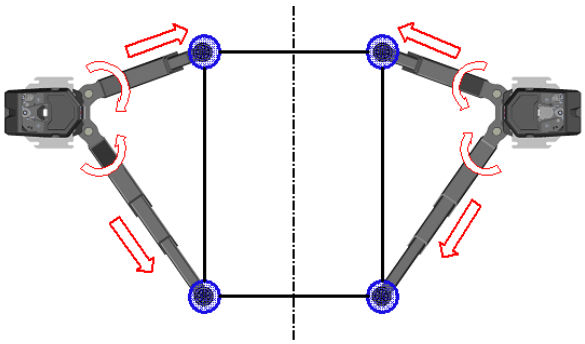

MA STAR 3.5 S / 5.5 / 6.5

- Swivel and extend the support arms to position the support discs under the pick-up points specified by the vehicle manufacturer. The load must rest centrally on the support plates.
- Adjust the height of the support plates so that all four support plates take the load simultaneously and evenly.

8.4 Raising and Lowering Cycles

8.4.1 Inspecting the Load Pick-up Points and Support Arm Locks

WARNING

Never remove lock bolts under full load!

- Set the main switch to position 1.
  After an initial flashing of all three lights, the UP button is permanently lit.
- Press the UP button until the support discs are in contact with the pick-up points of the vehicle.
- Check the position of the support discs and correct if necessary.
- Check that support arms lock securely. If necessary, move the support arms slightly until the toothed segments are engaged.

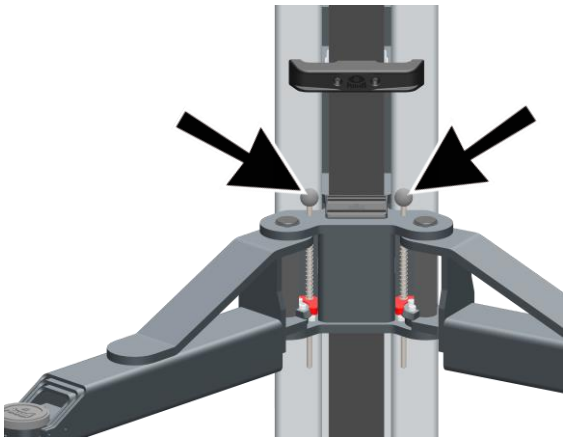

8.4.2 Lashing the Vehicle

The installation / removal of heavy components can lead to unintentional shifts in the vehicle's center of gravity. To prevent the vehicle from falling and causing personal injury, the vehicle must be secured to the support arms, e.g. using lashing straps.

The same applies to the lifting of partially dismantled vehicles, which are to be secured to the vehicle after start-up.

8.4.3 Continuing the Lifting Process

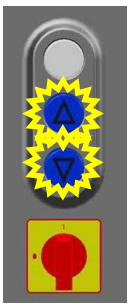

- Continue the lifting process by pressing the UP button until the desired lifting height is reached.
  UP and DOWN buttons are lit.

8.4.4 Lowering Process

- Before lowering the vehicle, remove tools, support blocks or similar obstacles from under the vehicle.
  The operator is responsible for ensuring that nobody is within the danger area.
- Press and hold the lit DOWN button until the desired lifting height is reached.
- The lift automatically stops when it has reached the CE-defined stop height.

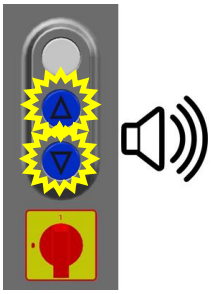

- For full lowering back to the initial position, release the DOWN button after reaching the CE stop and press it again.
- UP and DOWN buttons are lit. A signal sound is activated when lowering within the CE-defined height range.

8.5 Driving the Vehicle off the Lift

- After the lift has been lowered completely, turn the support arms out to the side and bring them back into starting position.
- Switch off the main switch.
- Then drive the vehicle off the lift.

NOTICE

There is a risk of damage to and loss of the toothed segments if the support arms come into contact with the wheels or other vehicle parts!

9 Troubleshooting

Malfunctions are interruptions in the workflow, such as may occur due to inattention or incorrect operation. Malfunctions can generally be eliminated without tools, except for the disassembly of covers.

When troubleshooting, proceed with caution. The safety instructions for operating the system apply.

9.1 Troubleshooting Table

Display	Diagnostics	Remedy
Signal sound immediately upon switching on.	Button pressed by mistake.	Release button.
	Control panel has short circuit.	Notify service team.
The lift stops when lowering and the blue DOWN button light goes out.	Lift has reached its end position.	Lift can only move upwards. If necessary, the lower end position can be adjusted to ground conditions by the service team.
	Signal sound when DOWN button is pressed again: Lift has met an obstacle.	Free the lift by pressing the UP button, remove the obstacle.
Support arms hit the ground during lowering.	Lower end position has not been set correctly.	Notify service team.
The lift stops when rising and the blue UP button light goes out.	Lift has reached upper end position (max. lifting height).	Lift can only be lowered.
	Signal sound when UP button is pressed again: Ceiling impact protection triggered.	Lower the lift by pressing the DOWN button. Signal tone when key is pressed again only with ceiling light barrier.
	Signal tone sounds immediately after the UP button goes out: Heavy running (max. load exceeded).	Lower the lift by pressing the DOWN button, reduce the load. Signal tone sounds immediately, without pressing the key again. (If necessary, check whether the correct stage mode is configured!)
Signal sound when lowering.	Movement within shearing zone.	No action needed.
Red fault indicator light is	Permissible tolerance	Notify service team.

Display	Diagnostics	Remedy
permanently on.	exceeded.	
	Signal sound when pressing the UP or DOWN button: Support nut breakage.	
Red fault indicator light flashes continuously.	Sensor malfunction.	Notify service team.
	UP and DOWN buttons flash when button is pressed: Wrong stage mode configured.	
DOWN button and UP button and red fault indicator flash more than 10 times.	Configuration mode.	Notify service team.
Red fault indicator flashes, blue DOWN button is lit.	Electrical emergency stop activated.	Lower the lift.
Red fault indicator light and blue UP/DOWN buttons are permanently lit.	Internal fault.	Turn off main switch and switch on again after approx. 5 seconds. Notify service team if the fault reoccurs.

9.2 Determining Defective Sensors

If the red status light on the operating unit flashes, a sensor is defective. To be able to determine the defective sensor, control lamps for each sensor are integrated on the circuit board. To do this, move the control unit to the service position (see section “The lift’s electrical connection”).

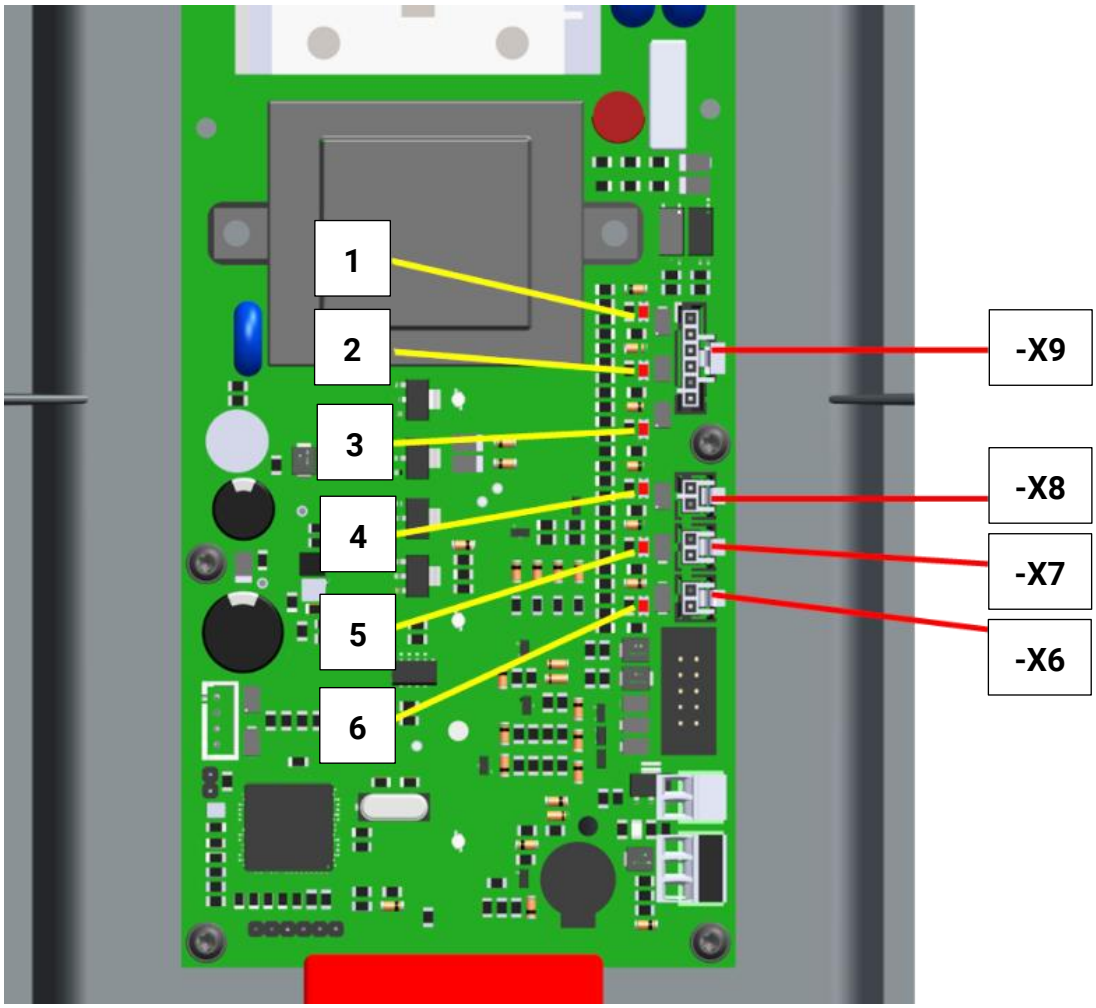

Connection	Function
-X6	Lower end position, operating column (+A)
-X7	Pulse generator, operating column (+A)
-X8	Nut fracture detection, operating column (+A)
-X9	Connecting cable, counter column (+B)

Control light	Sensor
1	Nut fracture detection, counter column (+B)
2	Pulse generator, counter column (+B)
3	Lower end position counter column (+B)
4	Nut fracture detection, operating column (+A)
5	Pulse generator, operating column (+A)
6	Lower end position operating column (+A)

The following operating states of the sensors are output via the flashing code of the control lights:

- Permanently ON Sensor covered
- Permanently OFF Sensor not covered
- 3x flashing and OFF Cable break
- 3x flashing and ON short circuit

Once the defective sensor is identified, it can be replaced. See section “Replacing and Adjusting the Sensors”.

10 Inspection and Maintenance

Depending on the conditions of use, the lift must be inspected at intervals of no more than12 months. In particular, safety devices, fastenings and load-bearing components must be inspected.

This inspection must be carried out by a competent person to ensure safe operation also until the next inspection.

The test and its findings shall be documented. MAHA provides the document "Inspection of lifts" for this purpose, which should preferably be filed in the inspection book. This list of test points is based on the DGUV 308-002 to be applied in Germany and is adapted to MAHA lifts.

All tests must be carried out with the system in an unloaded condition!

10.1 Inspection daily before starting work

To ensure the safety of the system during operation, the visual and functional checks listed below must be performed daily before starting work or beginning a shift.

10.1.1 Cables and actuators

Cables must not show any visible damage. Cables with visible pinch points, damaged sheathing, kinks or bends must be replaced immediately with new ones.

Pushbuttons must be smooth-running and clean and must not show any damage. Actuated pushbuttons must immediately return to their initial position after being released.

A lifting system with damaged cables or actuating elements must not be operated.

10.1.2 Emergency stop / Emergency stop

Emergency stop (main switch) and emergency stop (auxiliary control point) stop the drives of the lifting system to bring about a safe state of the system.

For testing, trigger a stroke movement by pressing the key after switching on the control. With the button pressed, actuate the emergency stop / emergency stop. The movement of the equipment must come to an immediate stop.

The test must be repeated for all operating points with emergency stop / emergency stop.
A system with a defective emergency stop must not be put into operation.

10.1.3 Limitation of the support arm extensions

The lift is equipped with telescopic support arms to accommodate a variety of vehicles. To prevent the vehicle from falling, the support arm telescopes are equipped with limits.

For testing, the support arms must be pulled out by hand. The support arms must not jam when reaching the end position, must not have excessive play and must not be able to be levered out upwards.

10.1.4 Function of the support arm lock

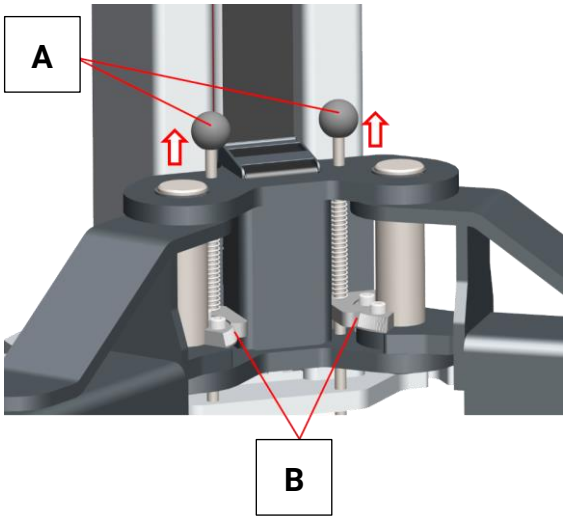

A Locking pin

B Tooth segments

The support arm lock prevents the vehicle from moving horizontally when raised. To this end, toothed segments are attached to the pivot bearing of the support arms, which allow free movement of the support arms in the lower end position and automatically engage with each other when lifted.

For inspection, check the locking bolt for free movement and the tooth segments for correct engagement daily before starting work. The tooth segments are correctly fixed when all teeth are fully engaged. If necessary, clean the tooth segments with a steel brush and lightly grease the tooth flanks.

The locking bolts must move easily and must not be damaged (bent).

Support arm locks that do not have the engagement described above, that have broken teeth, or that are otherwise damaged, must be replaced immediately in pairs with new segments. The same applies to damaged locking bolts.

10.1.5 Load receptacles

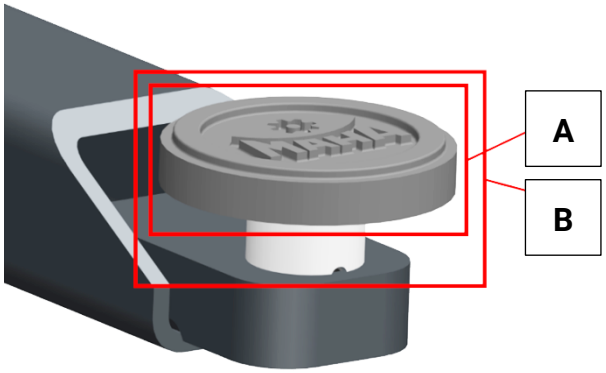

A Rubber pad

B Support plate with thread

Support plates take over the load and hold this in position. The rubber pad yields selectively under load. This protects the vehicle's mounting point and prevents the vehicle from slipping. If the rubber pad is damaged, this function can no longer be performed safely. Slipping of the vehicle and a vehicle crash is possible.

Support plates must not have any cracks or chipping. Defective support plates must be replaced.

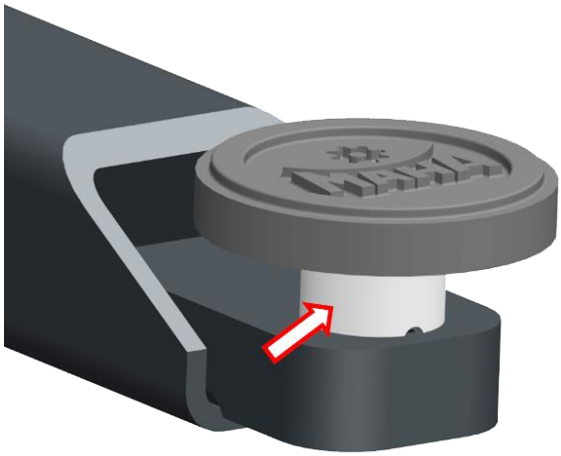

The thread on the support plate is used for height adjustment so that the vehicle rests evenly on all four support plates during lifting. This thread must be smooth-running. Dirty thread should be cleaned and lightly greased.

The circlip on the bottom must be present and correctly mounted.

10.2 Six-Monthly Inspection

10.2.1 Spindles and support nuts

Spindles and support nuts must be visually inspected for damage and contamination approx. every 6 months. These lead to increased wear and premature failure of the support nut. Damaged spindles must be replaced.

Damaged support nuts may no longer have the full load-bearing capacity (spalling, cracks). If the support nut is damaged, the pair of nuts must be replaced.

10.2.2 Wear of the support nut

The pair of nuts must be replaced when the wear limit is reached. If this condition is ignored, the support nut may break through as wear progresses. In this case, the downstream safety nut takes over the load completely and the vehicle can be lowered, but it cannot be raised again from the home position.

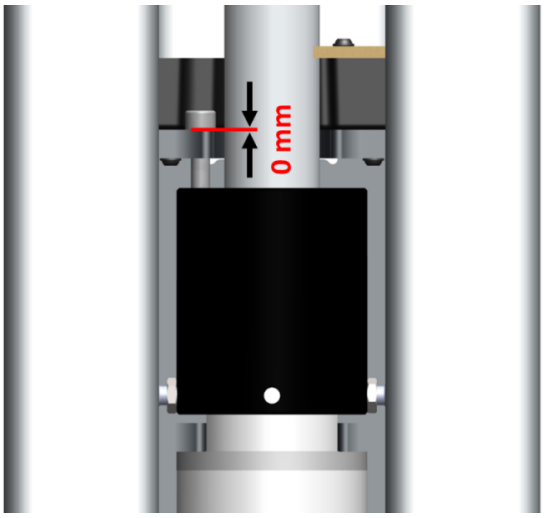

MA STAR 3.5

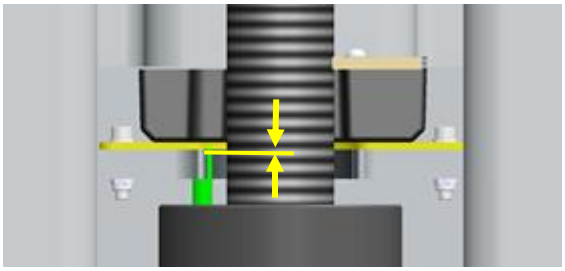

MA STAR 5.5 / 6.5

When new, the screw head lies completely on the plate to indicate wear. The wear limit is reached when the following dimensions are reached or exceeded.

MA STAR 3.5: Gap dimension ≥ 2 mm

MA STAR 5.5 / 6.5: Gap dimension ≥ 3 mm

When the wear limit is reached, the pair of nuts must be replaced.

The gap dimension must be noted in the inspection book during the annual UVV inspection of the lift!

10.2.3 Nut Fracture Detectioning

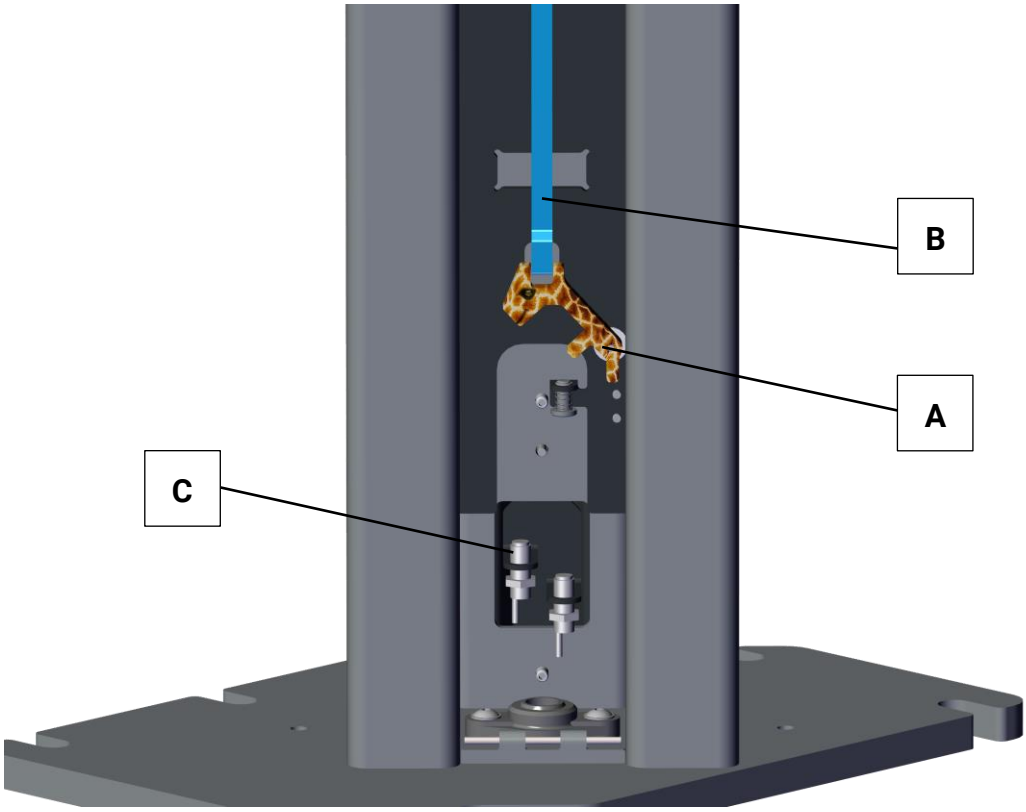

A Drop lever **B** Slider **C** Sensor for nut break detection

(shown without lift carriage)

The nut break detection system essentially consists of a drop lever with an eccentric center of gravity (the so-called "giraffe"), a slide and a sensor for detection.

If the support nut breaks due to unnoticed wear or overload, the slide releases the drop lever and it tilts to an approximately horizontal position. If the lift is lowered completely after the work is finished, the drop lever covers the corresponding sensor. As a result, the control system detects the nut break, issues an error message and prevents the system from lifting again.

The nut break detection must be checked for visible damage (giraffe, slider, sensor) approx. every 6 months.

WARNING

A lift with defective nut break detection must not be operated further under any circumstances. In this case, it must be professionally repaired before further operation.

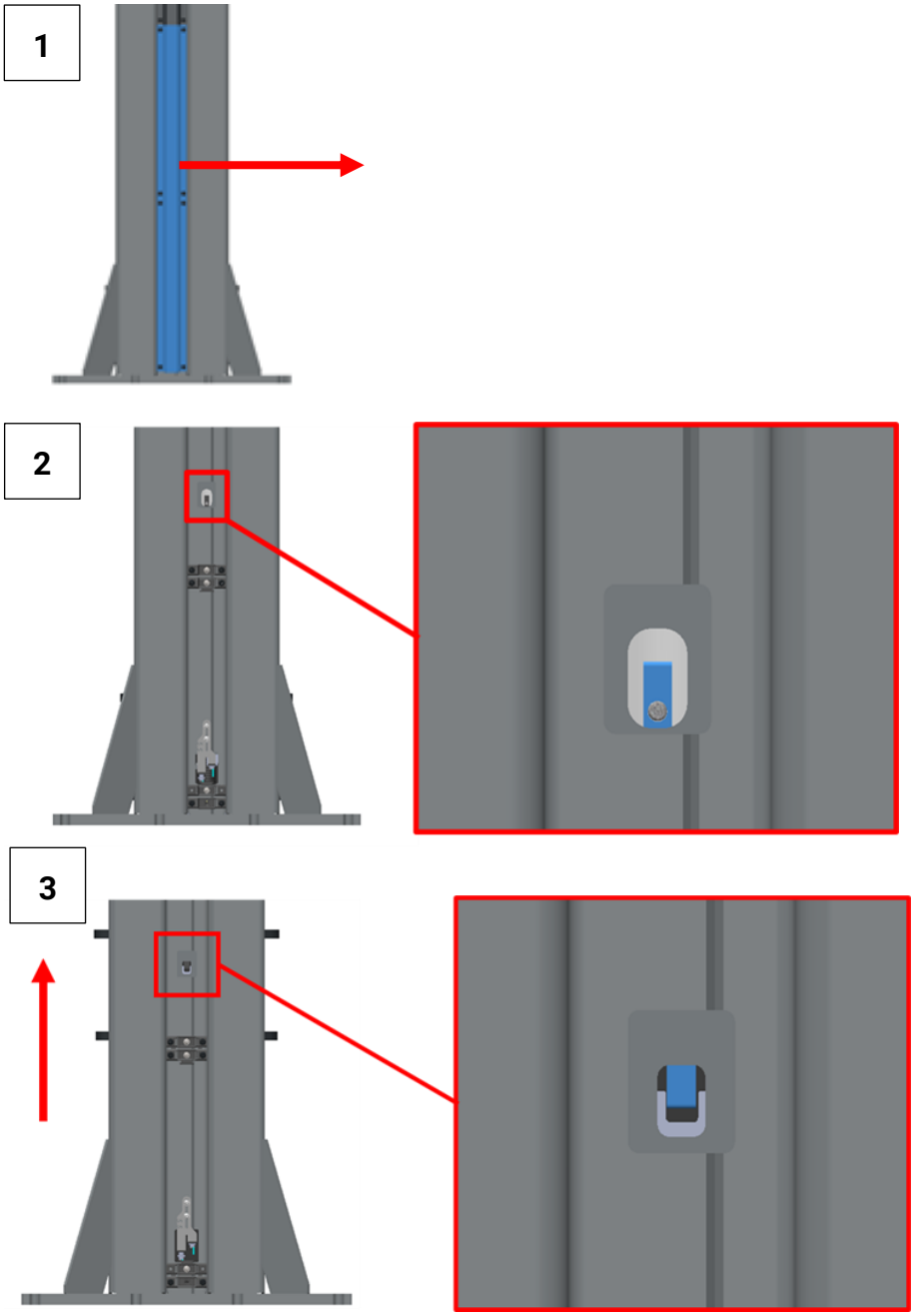

1 To check the slide, move the lift carriage to the lower end position and remove the two lower covers of the cable duct at the rear of the column.

2 Through the inspection opening in the column, the correct and damage-free attachment of the slide can be checked. This must be mounted so that it can rotate freely.

3 Then move the lift carriage upwards until the control openings of the column and lift carriage are on top of each other.
Now the correct engagement of the slide can be checked. The slider must hang in the recess of the nut breakage detection with play in all directions. It must not jam or sit in the recess.

10.2.4 Excavation protection of the support arm extensions

WARNING

The anti-lift device prevents the support arm segments from detaching from each other, e.g. during obstacle travel.
The safe operation of the plant depends on a correct setting of the excavation protection. Failure to comply with the setting instructions can result in a vehicle crash with serious to fatal personal injury.

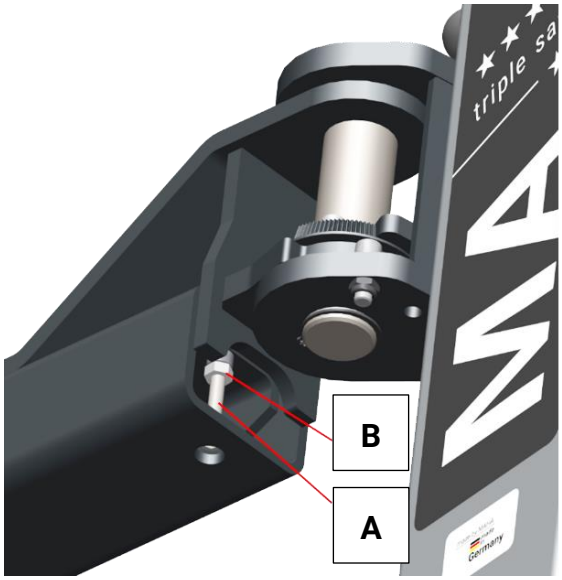

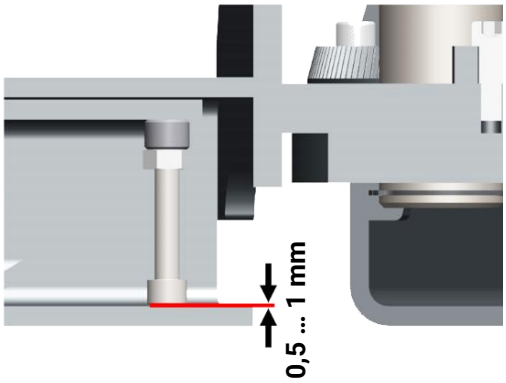

A Screw for excavation protection **B** Lock nut

To ensure safe operation:

1. Move the lifting carriage to working height.
2. Switch off the main switch.
3. Check screw for excavation protection for tight fit.
4. Check distance between screw head and support arm with feeler gauge: **0.5...1.0 mm**
5. If necessary, loosen lock nut and adjust distance.
6. Tighten the lock nut again.
7. Pull out and push in the support arms several times. Check distance again, return to step 5 if necessary.
8. If the setting is correct, fix the lock nut with locking varnish.

10.2.5 Fill level of the spindle lubrication

Check oil pan in the lift carriage for filling level, top up gear oil SAE140 (Art. No. 1402567) as required.

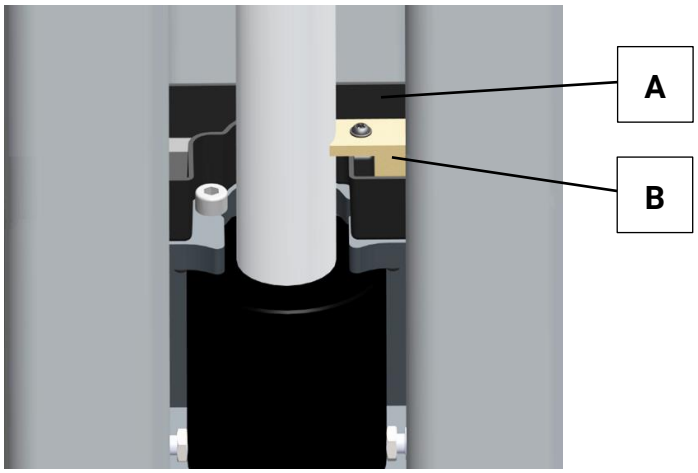

A Oil pan **B** Lubrication felt

The spindle is oiled by a lubrication felt, which is fed from the oil supply in the oil pan.

The oil pan in the reciprocating slide must always be filled so that there is a permanent lubricating film on the spindle. Remove any debris from the oil pan and refill at least every 6 months or more often if necessary. Also check the lubrication felt for wear and/or contamination and replace if necessary.

10.3 Yearly Inspection

Country-specific requirements exist for the regular inspection of lifting equipment. These generally require an inspection of the safe operating condition after 12 months at the latest.

Irrespective of these regulations, the following test points must be checked at least every 12 months and corrected if necessary.

10.3.1 Tightening torque of the fastening

The bolting of the anchor rods is crucial for the proper operation of the system and its stability. To retighten loosened bolts and detect loosened anchor rods, an annual inspection of the fastening is necessary.

For this purpose, all nuts must be checked or retightened with a torque wrench and the appropriate tightening torque.

MA STAR type	Anchor	Tightening torque
MA STAR 3.5	HILTI HAS-U 5.8 M16	80 Nm
Mounting plate MA STAR 3.5	HILTI HAS-U 5.8 M12	40 Nm
Fixing the column to the mounting plate	M16x45-8.8	150 Nm
MA STAR 5.5	HILTI HAS-U 5.8 M16	80 Nm
MA STAR 6.5	HILTI HAS-U 5.8 M20	150 Nm

10.3.2 Compressed air lines and fittings

Compressed air is an expensive energy. To avoid wastage, it is recommended to regularly check the lines on the lift for leaks. In addition, leaks in the line and at the fittings can reduce the flow rate and the working pressure, with the result that connected tools do not work as intended.

In pressurized lines, escaping air can often be sensed by feel and hearing. For finer detection of leaks, leakage sprays are available that indicate escaping air by bubbling.

If the line system is not sufficiently tight, tighten the screw connections if necessary and replace the plug connectors.

10.3.3 Timing belt

The toothed belts of the lift drive must be checked at least once a year for wear, dirt and correct tension. If toothed belts are worn, they must be replaced. The running surfaces of the pulleys must be free of oil and grease. The correct tension of the toothed belt is for

MA STAR 3.5: 100...120 Hz

MA STAR 5.5 / 6.5: 106...111 Hz

Procedure for tensioning the toothed belt: see section “Replace and tension timing belt”.

10.3.4 Brake

WARNING

Only remove the toothed belt when the lift is unloaded and fully lowered!

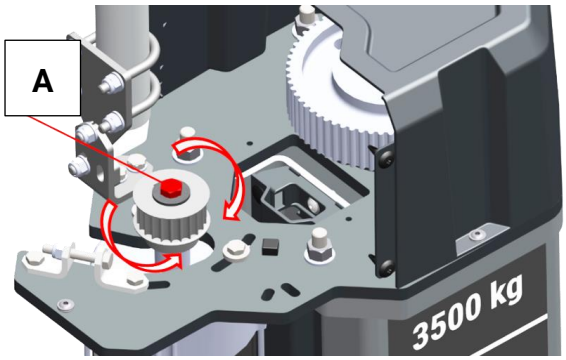

A Mounting screw

The torque of the brake must be measured directly on the drive shaft of the motor as part of the annual equipment inspection. The toothed belt must be removed for this. The measurement is taken directly via the fastening screw of the small toothed lock washer (SW 16). The minimum braking torque - in both directions of rotation - is for

MA STAR 3.5:	3.5 Nm
MA STAR 5.5 / 6.5:	7.2 Nm

If the torque falls below this value or there is a fault, the complete motor unit must be replaced!

The measured braking torque must be noted accordingly in the test book of the lift.

10.3.5 Obstacle Run

WARNING

Never perform the test under load!

If the lifting carriage or a support arm is blocked during downward travel, the drive spindle is "unscrewed" upward. The sensor at the top of the column is no longer covered, the system detects an obstacle and stops the lowering movement. To remove the obstacle, it is still possible to move away upwards.

For testing, place a stable, largely non-slip obstacle (square timber, pallet, etc.) vertically under the lifting carriage.
Move the lift carriage down. When reaching the obstacle, the spindle must start moving upwards. After approx. 10 mm of spindle movement, the system must stop and the "Down" key goes out. Driving away upwards must be possible.
Before moving down, check that the spindle pin at the foot end has not slipped

out of the guide bearing. If this is the case, the spindle pin must be positioned above the foot bearing before lowering so that it is guided there again after lowering and the bearing is not damaged or destroyed.

10.3.6 CE-Stopp

The CE stop is a programmed intermediate stop approx. 300 mm above the lower end position, which is approached during each lowering process to the lower end position. It alerts the operator to the pinch point between the support arm and the floor and gives him the opportunity to ensure that there are no limbs of surrounding persons and no tools under support arms and lift carriages.

When lowering, the stroke movement must be stopped at approx. 300 mm. After releasing and pressing again, it must be possible to move on to the lower end position.

11 Servicing

Regular maintenance ensures the function and operational safety of the lift and contributes to its value retention.

In order to ensure the safe operation and function of the lift, maintenance must be carried out at the latest after the intervals of the maintenance plan to the extent described.

Maintenance work may only be carried out by specially trained and authorized personnel. Such specialist staff include authorised, trained specialists employed by the manufacturer, the authorised dealers and the relevant service partners.

11.1 Safety Instructions

WARNING

- The relevant health and safety regulations must be observed.
- Wear personal protective equipment.
- Service work may only be carried out by authorised service technicians.
- Repairs, maintenance and set-up work should only be carried out when the machinery is stationary. The unit must be disconnected from the power supply and secured against being switched on again.
- Work on the electrical part of the lift may only be carried out by qualified staff or specialist electricians.
  ATTENTION: The 230V plug sockets on the operation unit(s) still carry power even after the system has been switched off!
- Maintenance and repair work should only be carried out when the lift is load-free.
- Only use original replacement parts.
- Substances that are hazardous to the environment must be disposed of appropriately.
- Do not use high or steam pressure equipment or harsh cleaning agents to clean the lift.
- The safety devices of the lift must be adjusted by authorized service technicians.
- The safety features must not be replaced or overridden.

11.2 Lubrication

11.2.1 Lubrication Points and Lubricants

NOTICE

Only the following lubricants are permitted for servicing and maintaining the lift!

Lubrication points	Lubricants
Spindle/support nut	Gear oil of viscosity class SAE 140 (Art. No. 1402567) **IMPORTANT:** Safe and fault-free operation cannot be guaranteed if other lubricants are used!
Sliding block raceways	FUCHS LUBRITECH STABYL TA (Art.-No. 1405686) **IMPORTANT:** If other lubricants are used, the service life of the sliding blocks may be reduced!
Support arm extensions Thread of the support plates	Suitable penetrating oil or spray oil (such as WD 40, Interflon, etc.)
Support arm lock Spindle bearing (MA STAR 5.5/6.5)	Multipurpose grease

11.2.2 Lubricating the Spindle and the Load Nut

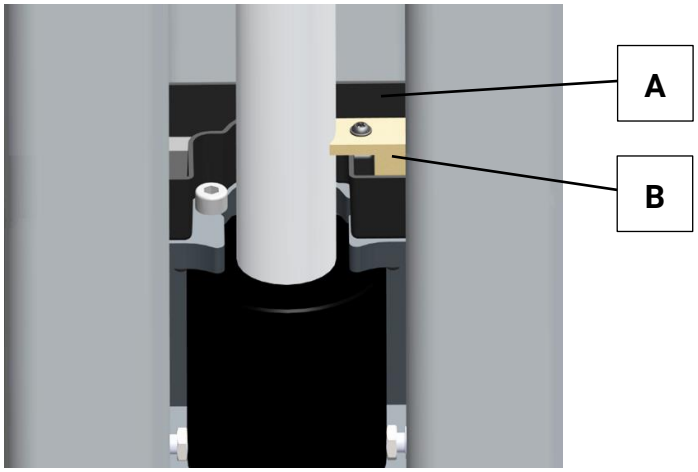

A Oil pan

B Lubrication felt

NOTICE

If there is dirt in the oil pan, this can impair the running characteristics of the lift!

The oil pan in the reciprocating slide must always be filled so that there is a permanent lubricating film on the spindle. Refill the oil pan at least every 6 months or more often if necessary. Also check the lubrication felt for wear and/or contamination and replace if necessary.

11.2.3 Greasing the Slide Tracks

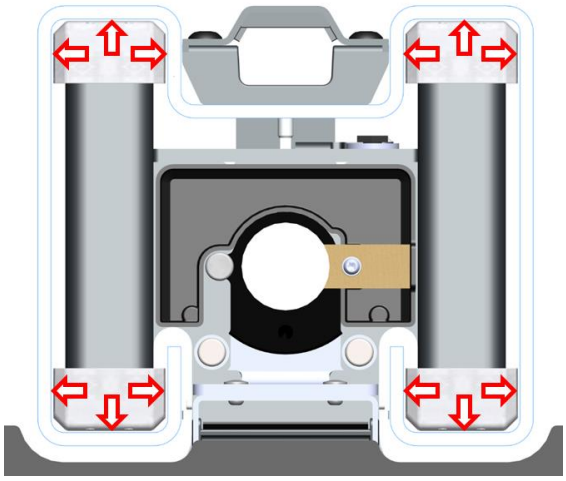

Lubricate the raceways of the sliding blocks at least every 6 months. To do so, move the lifting carriage to the lowest position. Then loosen and remove the spindle cover on the head plate. Lightly grease all slider tracks over the entire length with a brush.

11.2.4 Greasing the Arm Extensions

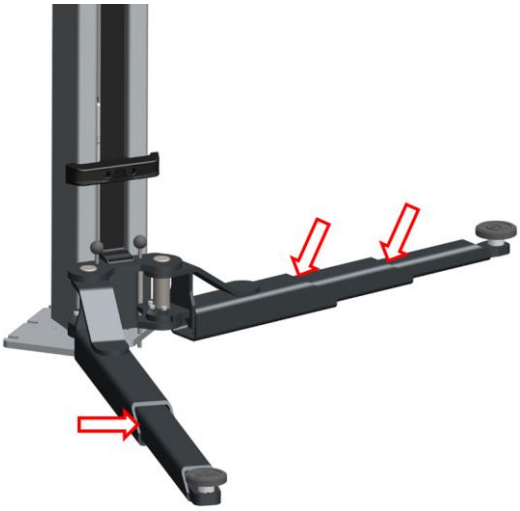

Check the support arms for free movement at least every 6 months and lightly oil the pull-out points and the roller support if necessary.

11.2.5 Lubricate the thread of the support plates

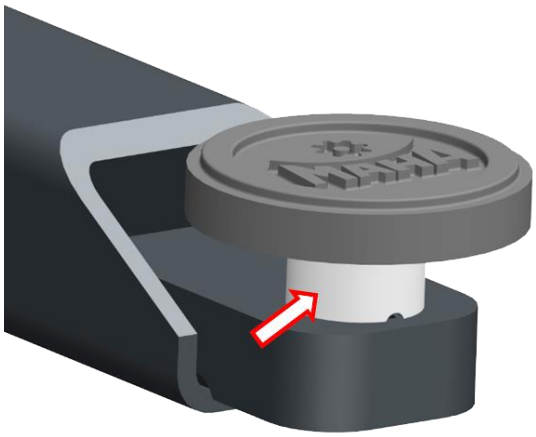

Check the threads of the support plates for free movement at least every 6 months and lightly oil if necessary.

11.2.6 Lubricating the Spindle Bearing (MA STAR 5.5 / 6.5 only)

Lubricate the upper spindle bearing at least once a year. Lower the lifting carriage to bottom position; loosen the spindle cover at the head plate and remove it. Then lubricate the spindle bearing with multipurpose grease through the lubrication nipple. For lubrication points, see section “Maintenance > Lubrication > Lubrication Points and Lubricants”.

11.3 Tensioning or Replacing the Toothed Belt

To adjust the tension of the toothed belt or to replace the toothed belt, proceed as follows:

MA STAR 3.5 **MA STAR 5.5 / 6.5**

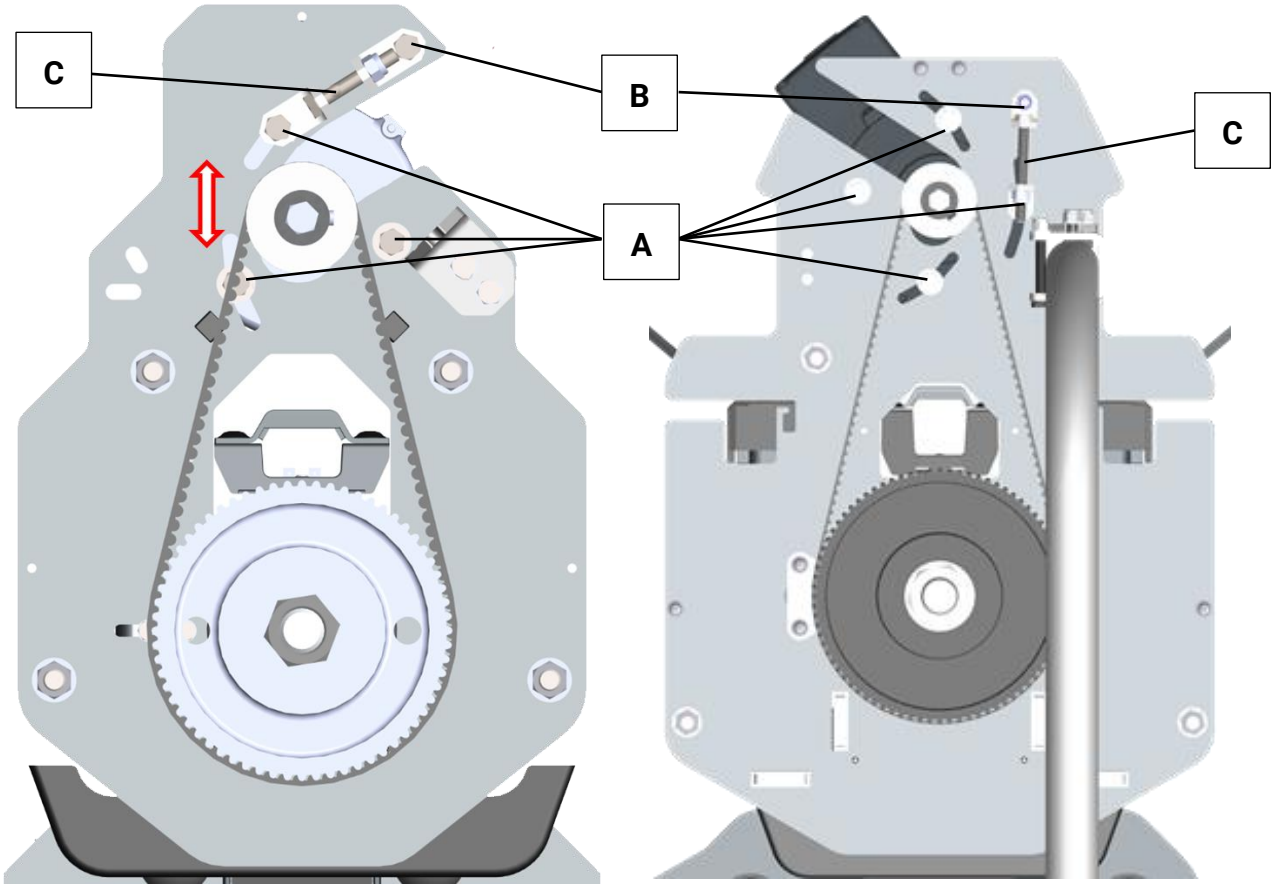

A	Motor mounting screws	**B**	Fastening screw of the clamping device	**C**	Clamping screw

1. Dismantle the cover hoods, see section “Fitting the cover hoods”.
2. Slightly loosen fastening screws of the motor (SW 13).
3. Slightly loosen the fastening screw of the clamping device (SW 13).
4. Remove the tensioning screw and swing the motor forward to remove/replace the toothed belt.
   Set the correct tension using the tensioning screw (SW 13):
   MA STAR 3.5 100...120 Hz
   MA STAR 5.5 / 6.5 106...111 Hz
5. Tighten the fastening screws of the motor and the clamping device to 20 Nm.
6. Check toothed belt tension again and readjust if necessary.
7. Refit the cover hoods.

11.4 Every 5 years

- Replace toothed belt.
- Replace silicone pads of the operating buttons - if present, also on the auxiliary column.

12 Repairs

WARNING

Service and repair work on the lift may only be carried out by authorised and trained specialist personnel!

The lifting system and its components were extensively tested during development and before marketing. Original spare parts correspond in quality and condition to those of a new lifting system. To ensure the operational safety and the longevity of your system, we recommend the exclusive use of original spare parts.

After repair or replacement of load-bearing parts, we recommend performing a function test with load to check correct assembly, the free movement of all parts and possibly the settling behavior.

For these tests, we recommend using a typical vehicle to be lifted, with a dead weight of approximately 75% of the rated load.

The nominal load specified on the type plate must not be exceeded under any circumstances!

Overload tests to verify the strength of the load-bearing parts were carried out as part of the conformity assessment procedure. The load-bearing capacity of the system and the relevant components was verified up to 1.5 times the nominal load.

Exceeding the nominal load can lead to pre-damage of components and thus to increased wear and premature failure.

12.1 Control

WARNING

Referencing is performed without monitoring the safety functions!

The controller must be configured and then a reference run must be performed.

12.1.1 Configuring the Controller

The lift's main board is not configured in the event of replacement. Configuration is carried out during commissioning for the first time as described below.

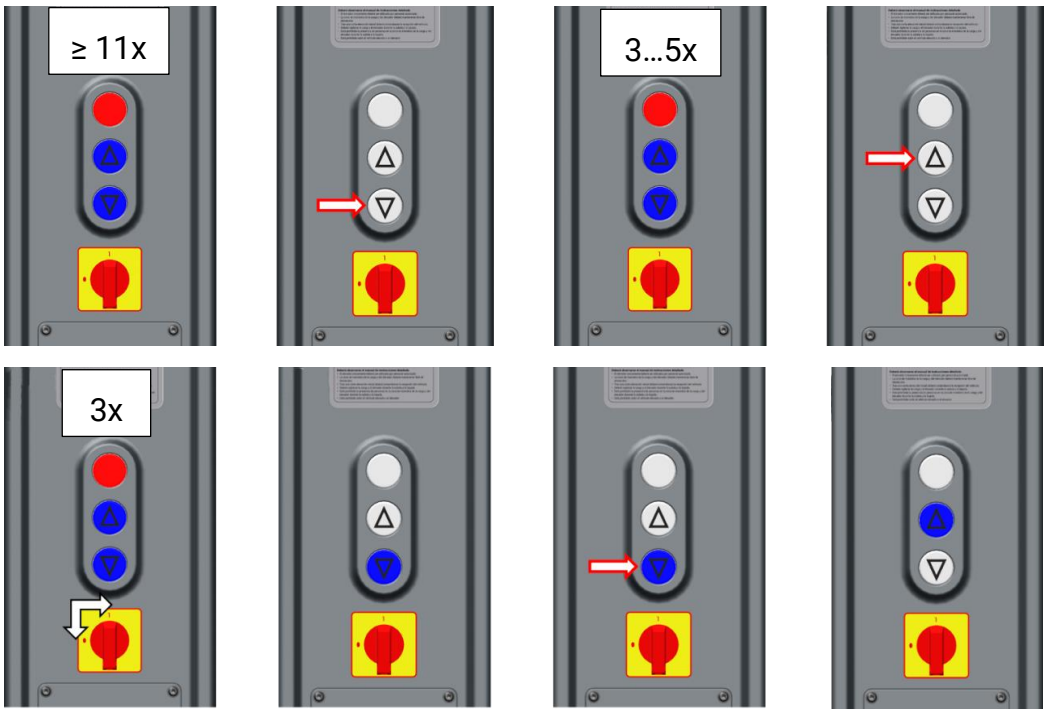

1 Switch on the main switch. A short beep sounds and all LEDs flash repeatedly ≥ 11x. The system is now in configuration mode.
The number of times all the lamps flash in the non-configured state can be used to determine the software version installed.
11x flashing → V1.00.001, 12x flashing → V1.00.002, etc.

2 Set the correct lift type by pressing the DOWN button.

3 The correct lift type is set when all LEDs flash repeatedly.
- 3x for MA STAR 3.5 A/S - 3x 400 V 50 Hz (standard)
- 4x for MA STAR 3.5 A/S - 3x 400 V 60 Hz (VZ 990491)
- 4x for MA STAR 3.5 A/S - 3x 230 V 50 Hz (VZ 990492)
- 4x for MA STAR 3.5 A/S - 3x 230 V 60 Hz (VZ 990499)
- 5x for MA STAR 5.5 / 6.5 - 3x 400 V (standard)

4 Press and hold the UP button until you hear a beep to confirm the entry.

5 Switch off the main switch and switch it on again after 5 seconds. All LEDs should flash 3 times.

6 The DOWN key is then permanently illuminated in blue.
If all LEDs flash repeatedly > 11x, start again at step 2.

12.1.2 Perform reference run

WARNING

Ensure that there are no obstacles or objects in the range of movement of the lift. The reference run is performed without monitoring the safety functions!

A reference run must be performed directly after the configuration of the lift type. (See illustrations in section “Configuring the controller”above.)

1 Press and hold the permanently illuminated DOWN key for approx. 10 s until the lifting carriage has moved down and stops in the lower end position.

2 Following successful reference travel, the UP button is permanently lit up blue. The controller is now ready for operation.

12.1.3 Activate configuration mode manually

If it becomes necessary to reconfigure the lift controller, this mode can be activated as follows:

1 Switch off the main switch.

2 Hold down the UP and DOWN keys simultaneously.

3 Switch on the main switch.

4 Continue to hold down the UP and DOWN keys until the configuration mode is active.

12.2 Replace sensors and adjust

The position of the sensors on the sensor retaining plates is preset ex works. If a defective sensor is replaced, mount the sensors as follows. IMPORTANT: The correct sensor position has to be marked with thread locking varnish.

12.2.1 Replace sensor for speed detection

MA STAR 3.5

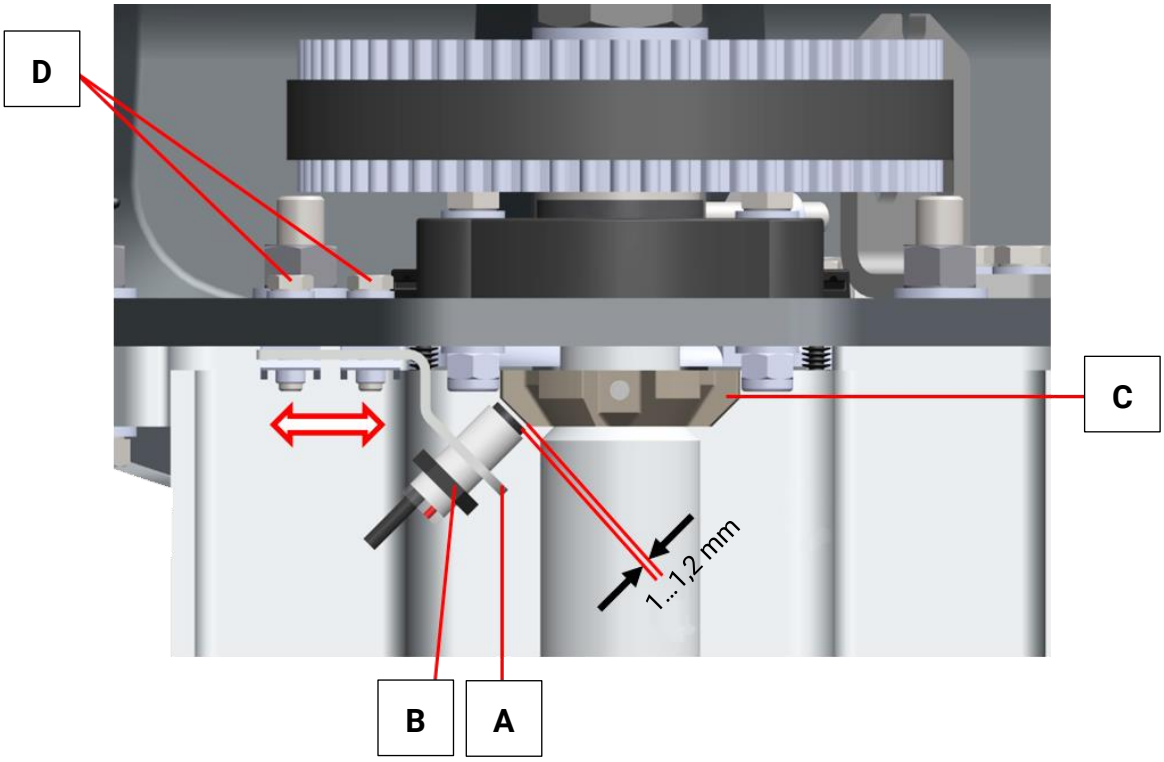

A Retaining plate **B** Sensor **C** Pulse wheel **D** Mounting screws

The upper sensors (B) for the pulse generator are fixed on a retaining plate (A) by lock nuts. The sensor position on the retaining plate is preset at the factory and marked with locking varnish. To adjust the switching distance of the upper sensors, proceed as follows:

1 Loosen the fastening screws SW 10 (D) of the retaining plate (A).

2 Move the retaining plate in the desired direction to set the required switching distance to the encoder wheel (C) (1...1.2 mm).

NOTICE

If the adjustment of the retaining plate is not sufficient, loosen the lock nuts of the sensor to bring it into the desired position.

3 Tighten the retaining plate fastening screws to 6 Nm.

NOTICE

Inaccurate positioning of the upper proximity switches causes errors in speed measurement and serious control problems including total failure of the lift. The pulses may only be picked up at the flat surface of the pulse generator, not at the edge.

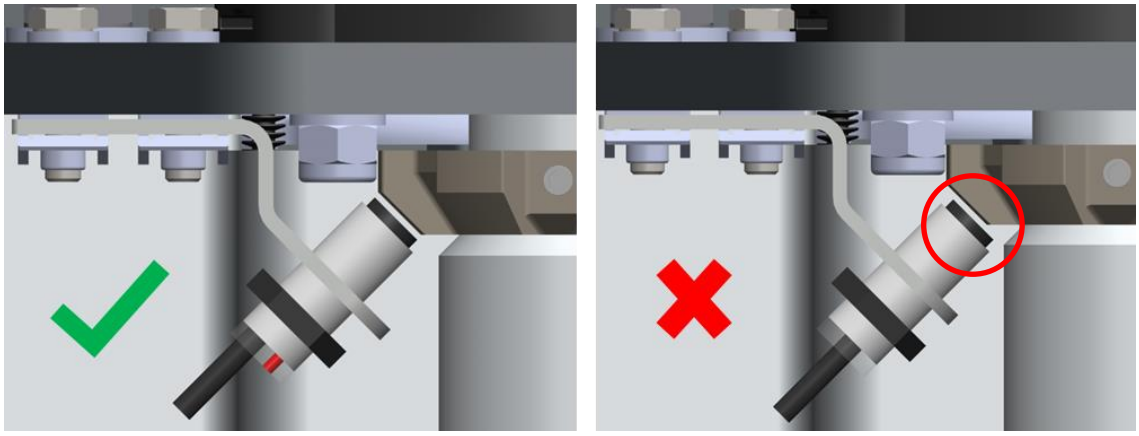

MA STAR 5.5 / 6.5

An inductive proximity switch is mounted below the motor plate to detect the speed pulses of a toothed pulley seated on the spindle. These pulses are used in the control system, e.g. for synchronization control and monitoring or for detecting an obstacle course. Replace sensor as follows:

1 Disconnect the defective sensor from the circuit board.

2 Open the cable duct at the rear.

3 Unscrew the sensor.

4 Pull the sensor cable through.

5 Mount the new sensor in reverse order.

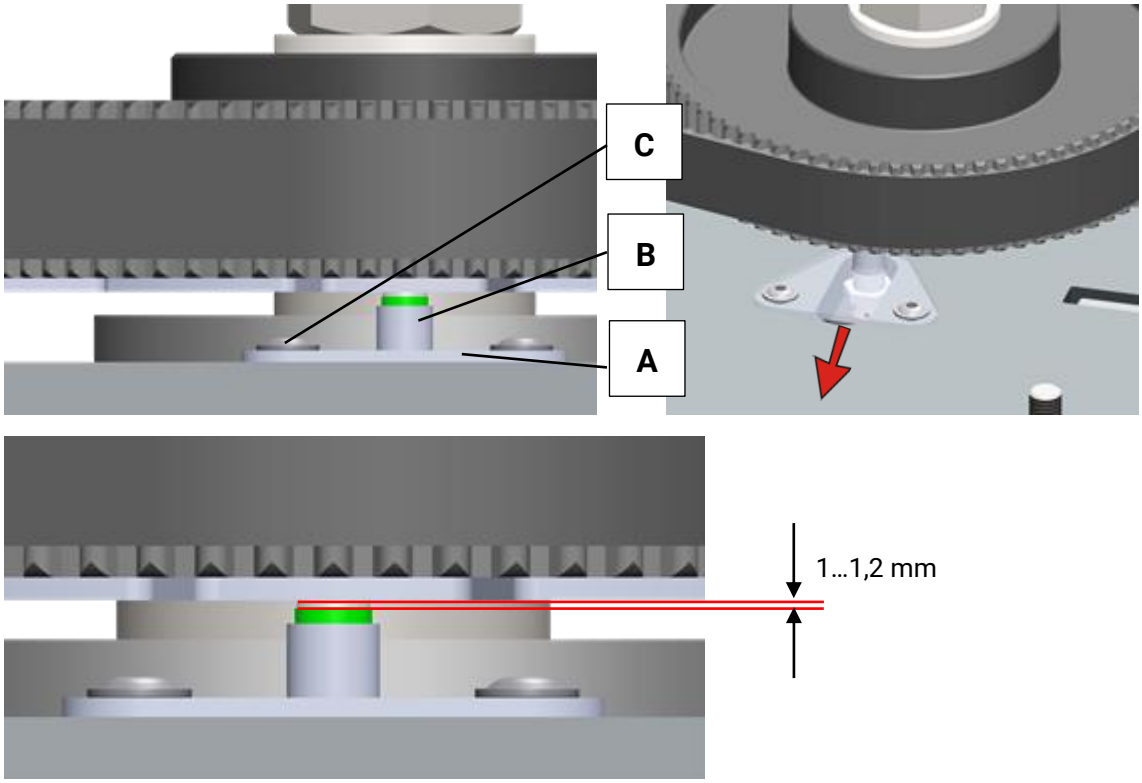

A Retaining plate **B** Sensor **C** Mounting screws

The upper sensors for the pulse generator are fixed on a retaining plate by lock nuts. The sensor position on the retaining plate is preset at the factory and marked with locking varnish. To adjust the switching distance of the upper sensors, proceed as follows.

1 Loosen the fastening screws (SW 4) of the retaining plate.
2 Carefully pull out the retaining plate from under the toothed belt pulley.
3 Loosen the lock nuts of the sensor to bring it into the desired position.
4 Push the retaining plate back under the toothed belt pulley and tighten the retaining plate fastening screws to 6 Nm.

12.2.2 Setting dimensions for sensor for speed detection

MA STAR 3.5

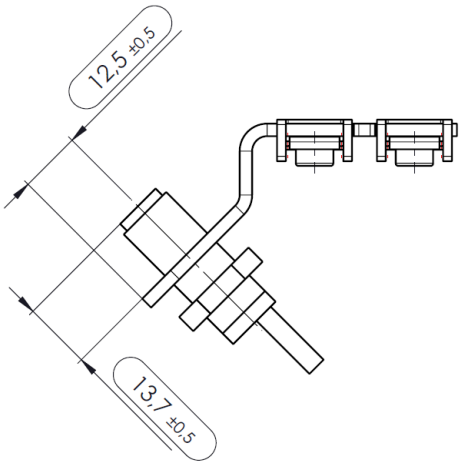

MA STAR 5.5 / 6.5

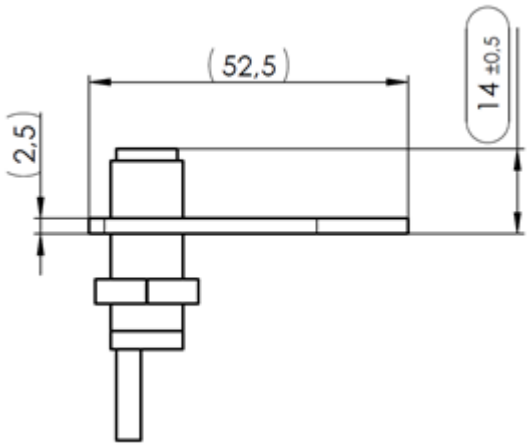

12.2.3 Replace lower proximity switch (lower end position + nut break)

See section „Setting the bottom end position“.

12.2.4 Setting dimensions for lower proximity switch (lower end position + nut break)

MA STAR 3.5

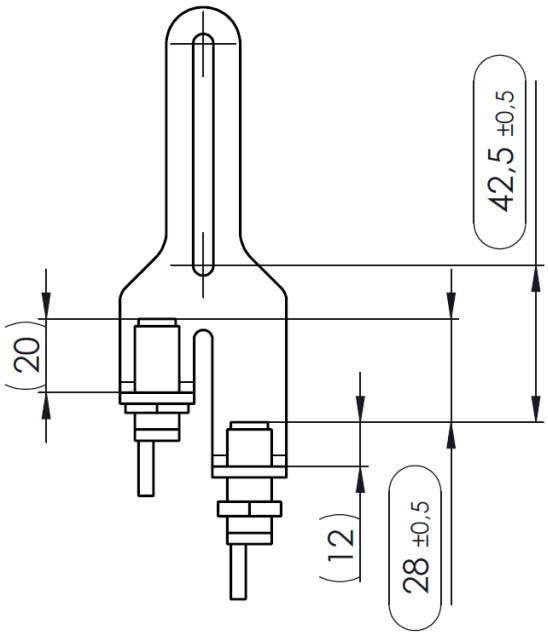

MA STAR 5.5 / 6.5

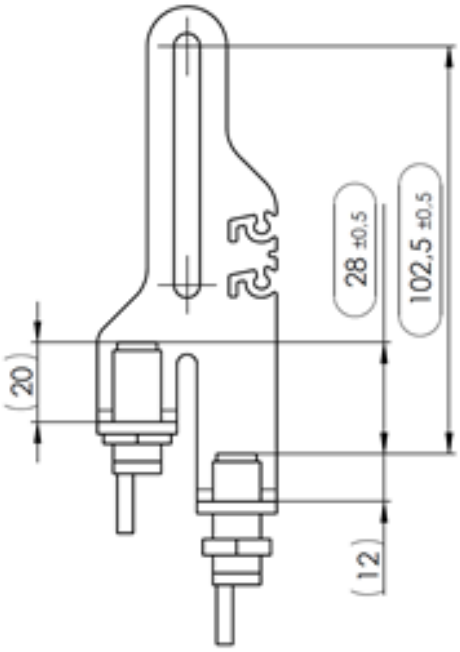

A Sensor Nut Break Detection **B** Sensor lower end position

12.3 Manual Lowering

WARNING

Only for trained personnel! The lift must not be put back into operation until the fault has been eliminated.

12.3.1 Electrical Emergency Lowering

WARNING

The electrical EMERGENCY STOP occurs without monitoring the safety devices! Make sure that the danger zone is clear!

1. Keep the DOWN key pressed until the stage moves downwards (approx.10 s).
2. During EMERGENCY AB travel, the indicator lamp flashes red.
3. Observe the vehicle during the lowering procedure and stop the lowering movement immediately in case of an inclined position or other hazards!

CAUTION

A second person must be called upon to observe the load!

4. Move the lift to home position.

12.3.2 Mechanical Emergency Lowering

1. Ensure that the main switch is turned off.
2. Remove the covers from both columns.
3. Fit the ring wrench/open-end wrench onto the spindle fastening nut:
   MA STAR 3.5 SW 36
   MA STAR 5.5 SW 46
4. Lower the lifting slide by turning the spindle with the wrench alternately in small steps of approx. 20 mm.

CAUTION

Observe the vehicle during the lowering procedure and stop the lowering movement immediately in the event of an inclined position or other hazards!

13 Extended warranty

MAHA grants the operator of the lift a warranty on the functionality of the spindle drive beyond the statutory warranty period. This warranty covers wear of the support nut, if it exceeds 2 mm, and wear on the lifting screw, if it restricts / hinders / prevents the operation of the lift.

This warranty is limited to the replacement of the worn component(s). It is valid for a maximum of five years after initial start-up and only if the regular inspection and maintenance intervals according to these operating instructions have been demonstrably observed. Compliance is only deemed to have been demonstrated if the required work has been carried out by our factory customer service, one of our dealers or one of our service partners.

The extended warranty does not apply if the equipment has not been operated - even temporarily - in accordance with its intended use.

14 Decommissioning, Dismantling and Disposal

The device may only be taken out of operation and disassembled by specially authorised and trained personnel. Such specialist staff include authorised, trained specialists employed by the manufacturer, the authorised dealers and the relevant service partners.

Observe the product and safety data sheets of the lubricants used. Avoid environmental damage. If the device is to be disposed of, it must be disposed of in an environmentally responsible manner in accordance with local legislation. Sort all dismantled materials according to type and take them to a suitable recycling point. Collect operating materials such as grease, oil, coolant, cleaning fluids containing solvents etc. in suitable containers and dispose of them in an environmentally responsible manner.

Alternatively, you can take your device to a waste management company. They will ensure that all parts and fluids are disposed of properly and ecologically.

15 Exploded views

15.1 Drive

MA STAR 3.5

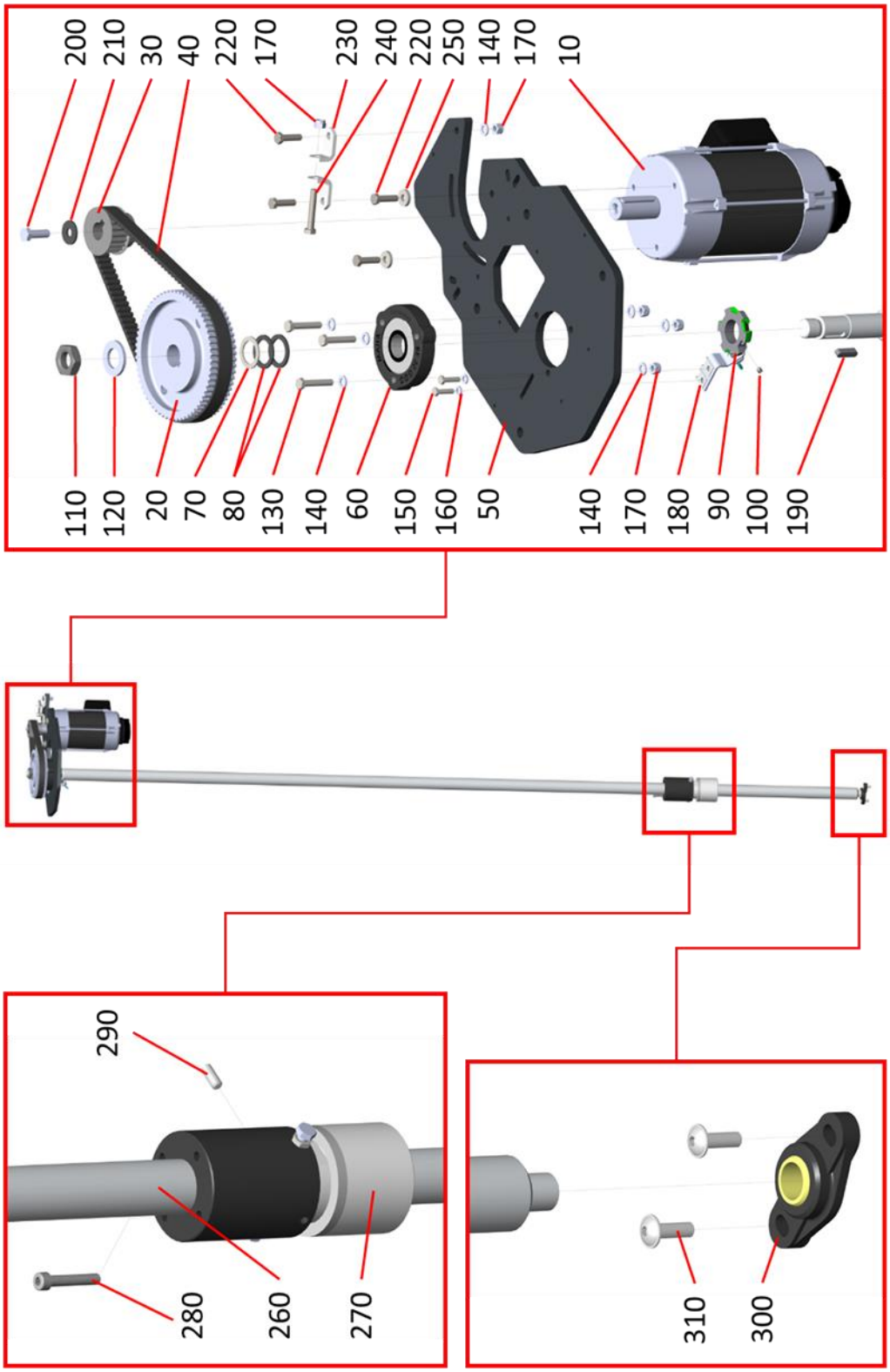

Pos.	Component	Description
10	Electric motor 3kW incl. brake	
20.1	Pulley large 64z	50 Hz
20.2	Pulley large 80z	60 Hz
30	Pulley small 22z	50 Hz + 60 Hz
40.1	Toothed belt HTD 800-8M-20	50 Hz
40.2	Timing belt 880-8MGT-20	60 Hz
50	Head plate	
60	Flange bearing Fa. TMK	
70	Shim 28×40×2	
80	Shim 30×42×2.5	
90	Pulse generator RD 60	
100	Grub screw M6x6-45H VZR	Tightening torque 6 Nm
110	Hex nut, M24×2-8	Tightening torque 50 Nm
120	Washer A25-200HV	
130	Hex screw M8×45-8.8	Tightening torque 20 Nm
140	Washer A8.4-200HV	
150	Hexagon head screw M6x25-8.8	Tightening torque 5 Nm
160	Washer A6,4-200HV	
170	Hexagon nut M8-8	
180	Sensor top cpl.	
190	Feather key A8×7×30	
200	Hexagon head screw M10x30-8.8	Tightening torque 35 Nm
210	K washer A10.5	
220	Hex screw M8×30-8.8	Tightening torque 20 Nm
230	Belt tensioner	
240	Hex screw M8×50-8.8	
250	Washer 8,4x21x4-100HV	
260	Spindle Tr 40x6	
270	MAPOWER II mother package	
280	Cylinder screw M8x45-8.8	Wear screw
290	Grub screw M8x20-45H	
300	Flange bearing Igubal	
310	Flat head screw M8x25-10.9	Tightening torque 20 Nm

MA STAR 5.5 / 6.5

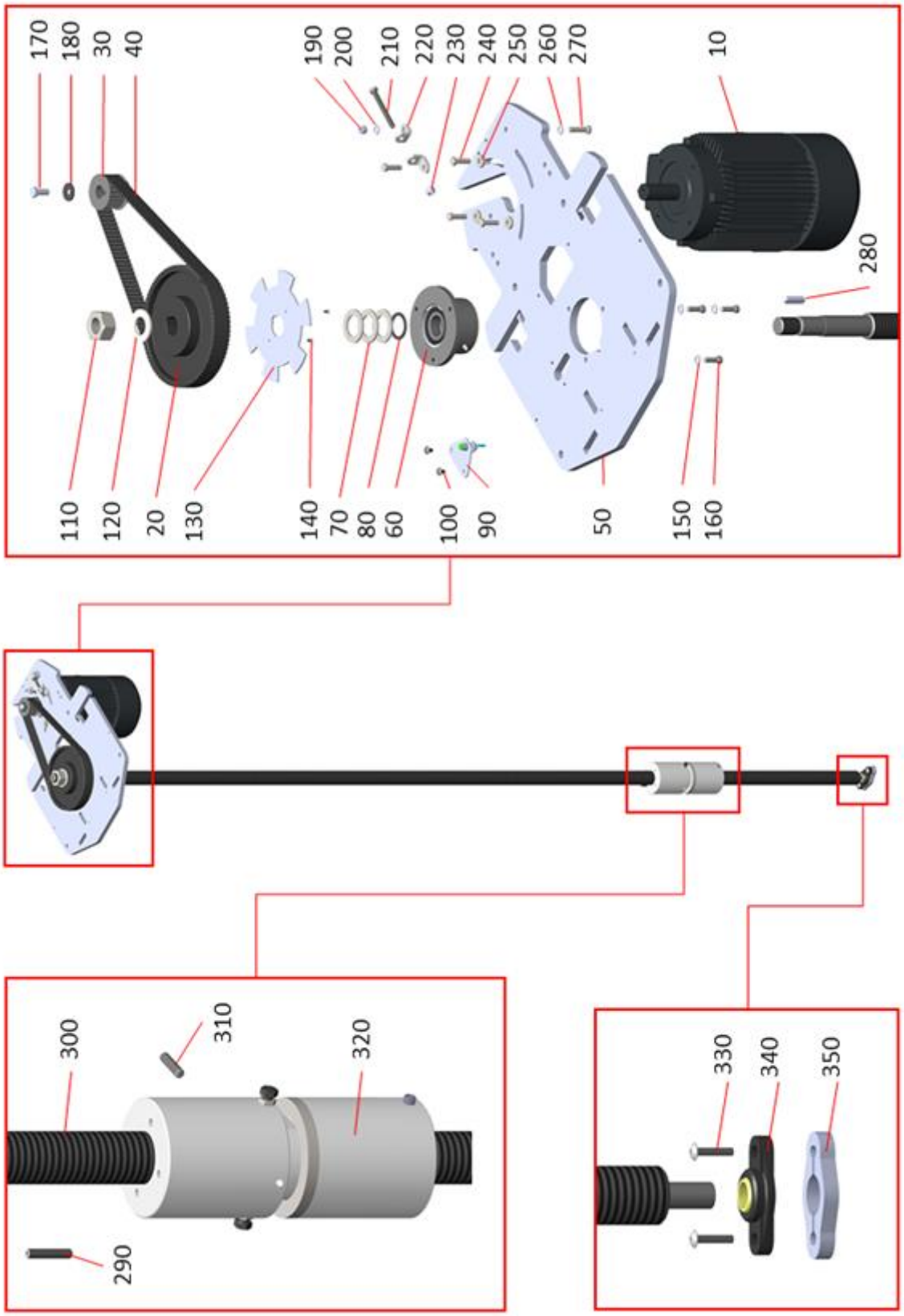
170
180
30
40
190
200
210
220
230
240
250
260
270
10
280
110
120
20
130
140
70
80
60
100
90
50
150
160
300
310
320
290
330
340
350

Pos.	Component	Description
10	Motor w. Brake MA STAR 4kW	
20	Toothed Pulley HTD80-8M-30/32H7	50 Hz
30	Toothed Pulley HTD22-8M-30/28H7	50 Hz
40	Toothed belt 1040-8MGT-30	50 Hz
50	Head plate	
60	Fixed bearing	pre-assembled
70	Spacer washer	
80	Shim 35x45x2	
90	Pulser top	
100	Flat head screw M6x10-10.9	Tightening torque 6 Nm
110	Hexagon nut M30-8	Tightening torque 50 Nm
120	Washer A31-200HV	
130	Sheet metal pulse generator	
140	Flat head screw M4x8-10.9	
150	Washer A8.4-200HV	
160	Cylinder screw M8x25-8.8	Tightening torque 20 Nm
170	Hexagon head screw M10x25-8.8	Tightening torque 35 Nm
180	K washer A10.5	
190	Hexagon nut M8-8	
200	Washer A8.4-200HV	
210	Hexagon head screw M8x80-8.8	Tightening torque 20 Nm
220	Belt tensioner	
230	Hexagon nut M8-8	
240	Hex screw M8×30-8.8	Tightening torque 20 Nm
250	Washer 8,4x21x4-100HV	
260	Washer A8.4-200HV	
270	Hex screw M8×35-8.8	Tightening torque 20 Nm
280	Key A10x8x40	
290	Thread - pin M8x40-45H	
300	Spindle Tr 44x7	
310	Thread - pin M8x35-45H	
320	Mother package MAPOWER II 5.5	
330	Flat head screw M6x30-10.9	Tightening torque 6 Nm
340	Flange bearing igubal	
350	Spacer bearing	

15.2 Column

MA STAR 3.5

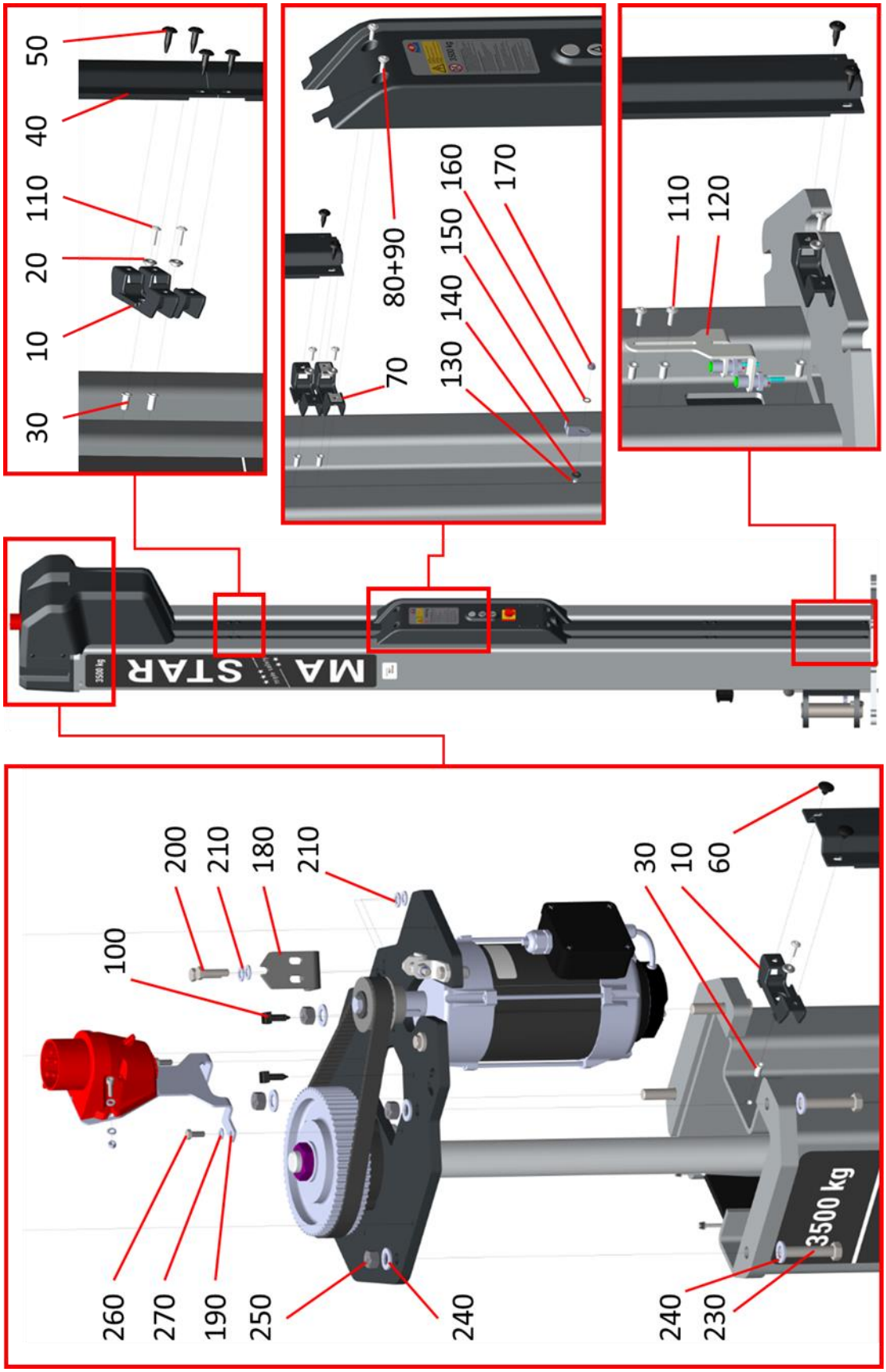

Pos.	Component	Description
10	Holder cover 3,5t	
20	Bushing 5,5x9x14x5x2	
30	Blind rivet nut M5 7x15	
40	Cover rear 3.5t	
50	Expanding rivet LSBN 6,5x8,5	
60	Plug pin 6x10	
70	Nut clip M6 20x15x0.8	
80	Bushing w. collar 6.5x8.5x13x4.5	
90	Flat head screw M6x20-10.9	Tightening torque 3,5 Nm
100	Cable tie holder 7,4x24	
110	LFK screw M5x16-10.9	Tightening torque 3,5 Nm
120	Limit switch mount. 3,5t	
130	Flat head screw M6x16-8.8	Tightening torque 10 Nm
140	Washer Contact washer BIC-M6	
150	Flat plug screw-on. 6.3mm	
160	Serrated lock washer A6.4	
170	Hexagon nut M6-8 galv. self-locking	
180	Hinge Bl 6x116x40	
190	Holder socket Bl 3x201x135	
200	Hex screw M8×30-8.8	Tightening torque 20 Nm
210	Washer A8.4-200HV	
220	Hexagon nut M8-8 galv. self-locking	
230	Hexagon bolt M12x60-8.8	Tightening torque 65 Nm
240	Washer A13-200HV	
250	Hexagon nut M12-8	
260	Hexagon head screw M6x16-8.8	Tightening torque 10 Nm
270	Washer A6,4-200HV	

MA STAR 5.5 / 6.5

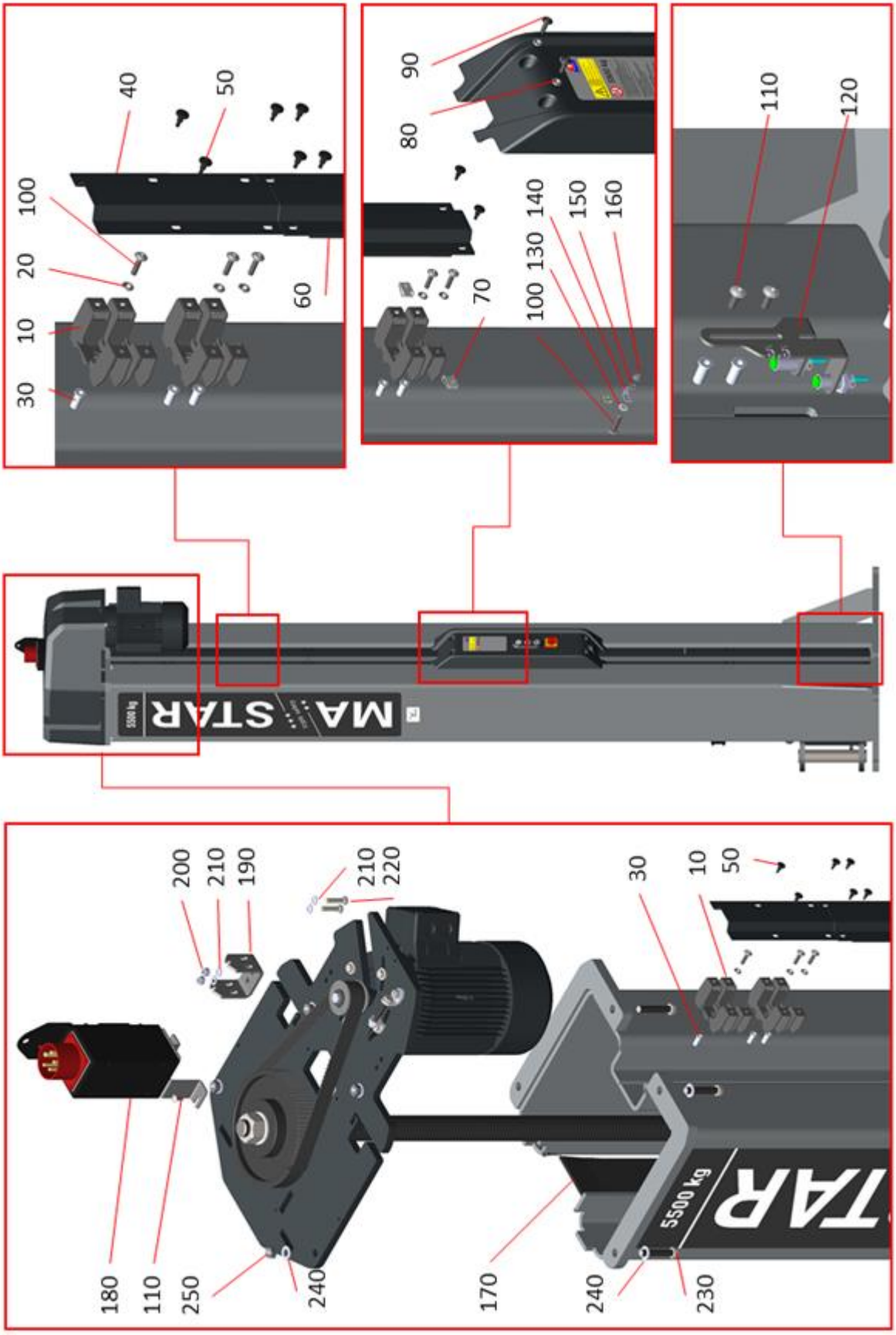
30
10
20
100
40
50
60
90
80
70
100 130 140
150
160
110
120
MA STAR
5500 kg
180
110
250
200
210
190
240
210
220
170
240
230
30
10
50
5500 kg

Pos.	Component	Description
10	Holder cover MA STAR 5.5	
20	Socket with collar 6,5x8,5x13x4,5	
30	Blind rivet nut Fl.head Alu M6	
40	Cover rear BL 1,5x221x109	
50	Expanding rivet complete d=6,5 t=4-6mm	
60	Rear cover	
70	Nut clip M6 20x15x0.8	
80	Bushing w. collar 6.5x8.5x13x4.5	
90	Flat head screw M6x20-10.9	Tightening torque 3.5 Nm
100	Flat head screw M6x25-10.9	Tightening torque 3.5 Nm
110	Flat head screw M6x16-8.8	Tightening torque 3.5 Nm
120	Limit switch mounted MA STAR 5.5	
130	Washer Contact washer BIC-M6	
140	Flat plug screw-on 6.3 mm	
150	Serrated lock washer A6.4	
160	Hexagon nut M6-8 galv. self-locking	Tightening torque 10 Nm
170	Cover spindle MA STAR 5.5	
180	Connector pre-assembled MA STAR 5.5	
190	Hinge BL 6x191x40	
200	Hexagon nut M8-8 galv. self-locking	
210	Washer A8.4-200HV	
220	Hex screw M8×35-8.8	Tightening torque 20 Nm
230	Hexagon bolt M12x65-8.8	Tightening torque 65 Nm
240	Washer A13-200HV	
250	Hexagon nut M12-8	

15.3 Carriage

MA STAR 3.5

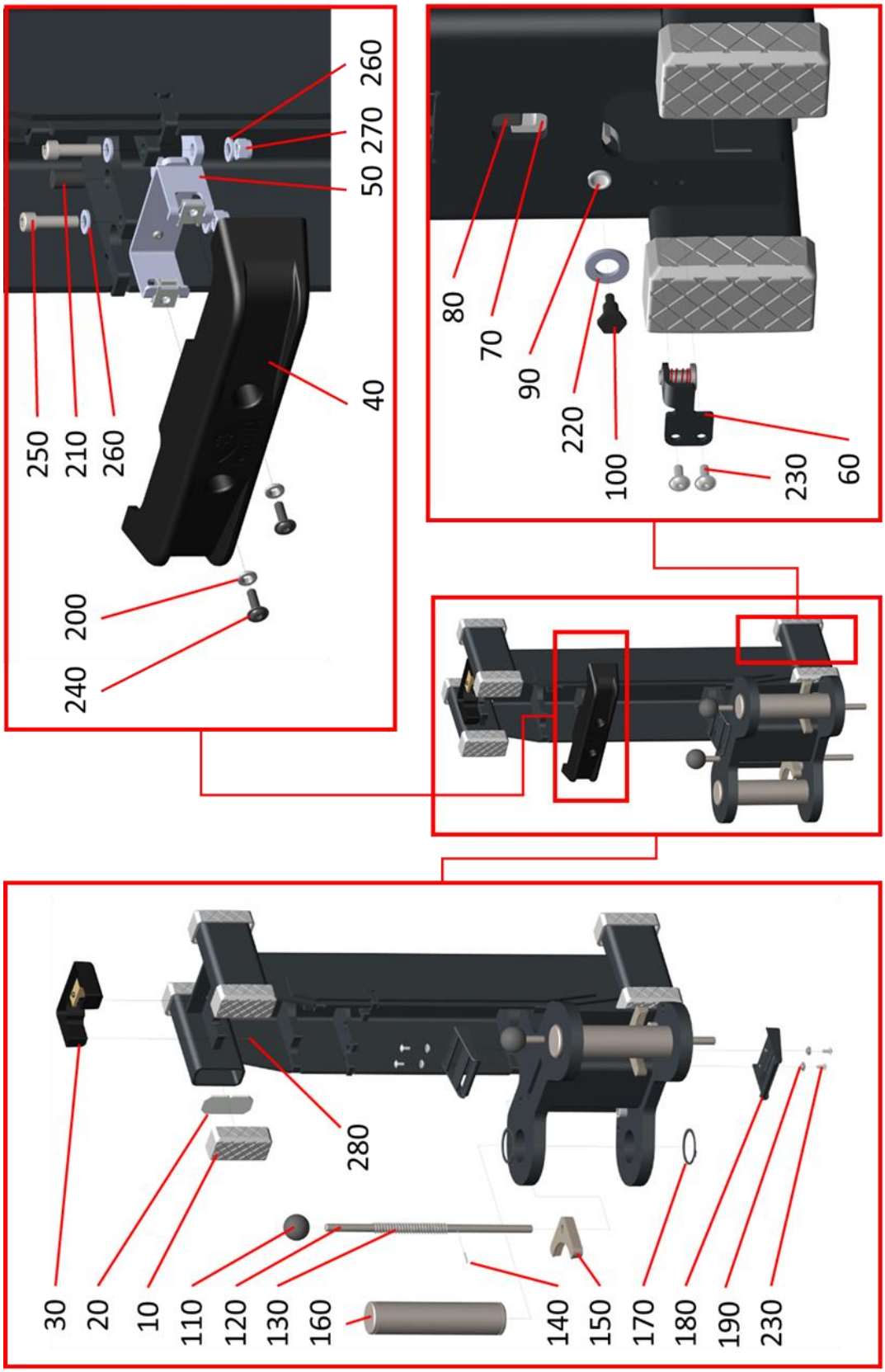

Pos.	Component	Description
10	Glide Stone	
20	Support plate sliding block Bl 4x79x38	
30	Oil pan mounted	
40	Shock protection column	
50	Support plate mounted Support nut MA STAR	
60	Limit switch mounted	
70	Shift lever Bl 10x89x42	
80	Rod mother fracture	
90	Bushing 9x12,5x20x10x2	
100	Screw w. collar M5x8x8,5x11	Tightening torque 5 Nm
110	Ball knob rubber M12-D40	
120	Unlocking rod MA STAR RD 12x330	
130	Compression spring 2x13,5x145	
140	Dowel pin 3x20 blank	
150	Tooth segment	
160	Support arm bolts MA STAR RD 50x212	
170	Circlip A50x2 Delta Tone 9000	
180	Deflection cover	
190	Bushing 5,5x9x14x5x2	
200	Bushing w. collar 6.5x8.5x13x4.5	
210	Damper ø12x21	
220	Washer polyam. 13x24x2,5	
230	Flat head screw M5x12-10.9	Tightening torque 3.5 Nm
240	Flat head screw M6x20-10.9	Tightening torque 3.5 Nm
250	Cylinder screw M8x30-8.8	Tightening torque 20 Nm
260	Washer A8.4-200HV	
270	Hexagon nut M8-8	
280	Threaded through bolt for plastic 4x22	Tightening torque 1.5 Nm

MA STAR 5.5 / 6.5

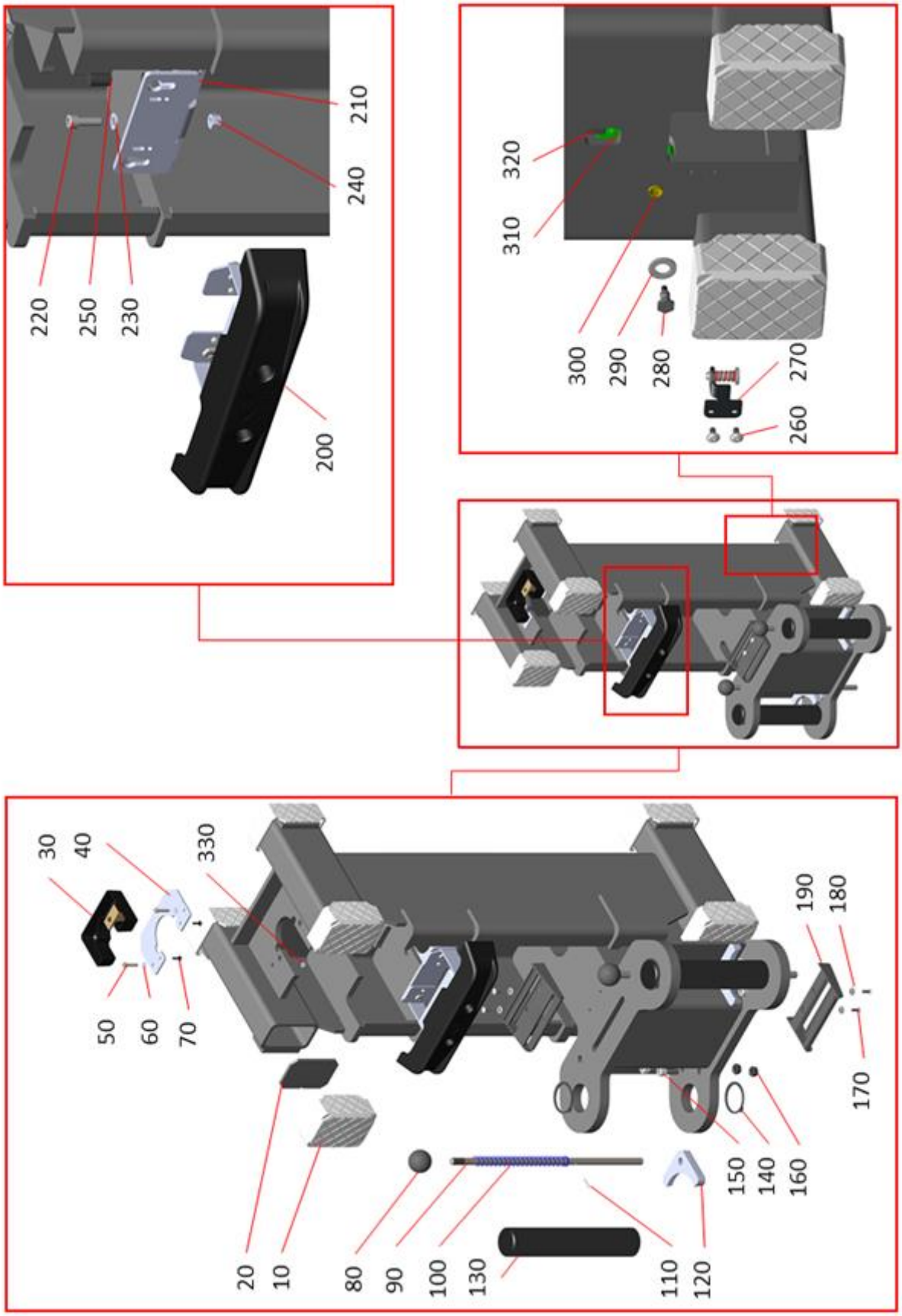
220
250
230
210
240
200
320
310
300
290
280
270
260
30
40
50
60
70
330
20
10
80
90
100
130
110
120
150
140
160
190
180
170

Pos.	Component	Description
10	Sliding block MA STAR 5.5	
20	Support plate sliding block	
30	Oil pan mounted	
40	Bracket oil pan	
50	Cheese head screw M5x25-8.8	
60	Washer A5,3-200HV	
70	Threaded through bolt for plastic 4x14	
80	Ball knob rubber M12-D40	
90	Unlocking rod MA STAR 5.5	
100	Pressure spring	
110	Dowel pin 3x20 blank	
120	Tooth segment	
130	Support arm bolt RD 50x267	
140	Circlip A50x2 Delta Tone 9000 Del	
150	Cylinder screw M10x30-12.9	
160	Hexagon nut M10-8	
170	Flat head screw M5x16-10.9	Tightening torque 3.5 Nm
180	Bushing 5,5x9x14x5x2	
190	Deflection cover MA STAR 5.5	
200	Shock protection mounted MA STAR 5.5	
210	Support plate Support nut	
220	Cheese head screw M8x25-8.8	Tightening torque 20 Nm
230	Washer A8.4-200HV	
240	Hexagon nut M8-8	
250	Damper ø12x21	
260	Flat head screw M5x10-8.8	Tightening torque 3.5 Nm
270	Limit switch mounted Lifting slide MASTAR 55	
280	Screw w. collar M5x8x8,5x13	Tightening torque 5 Nm
290	Washer polyam. 13x24x2,5	
300	Bush w. collar D9x12,5x20 L12x2	
310	Gearshift MA STAR 5.5	
320	Rod MA STAR 5.5 Nut break	
330	Hexagon nut M5-8	

15.4 Cable Bridge

MA STAR 3.5

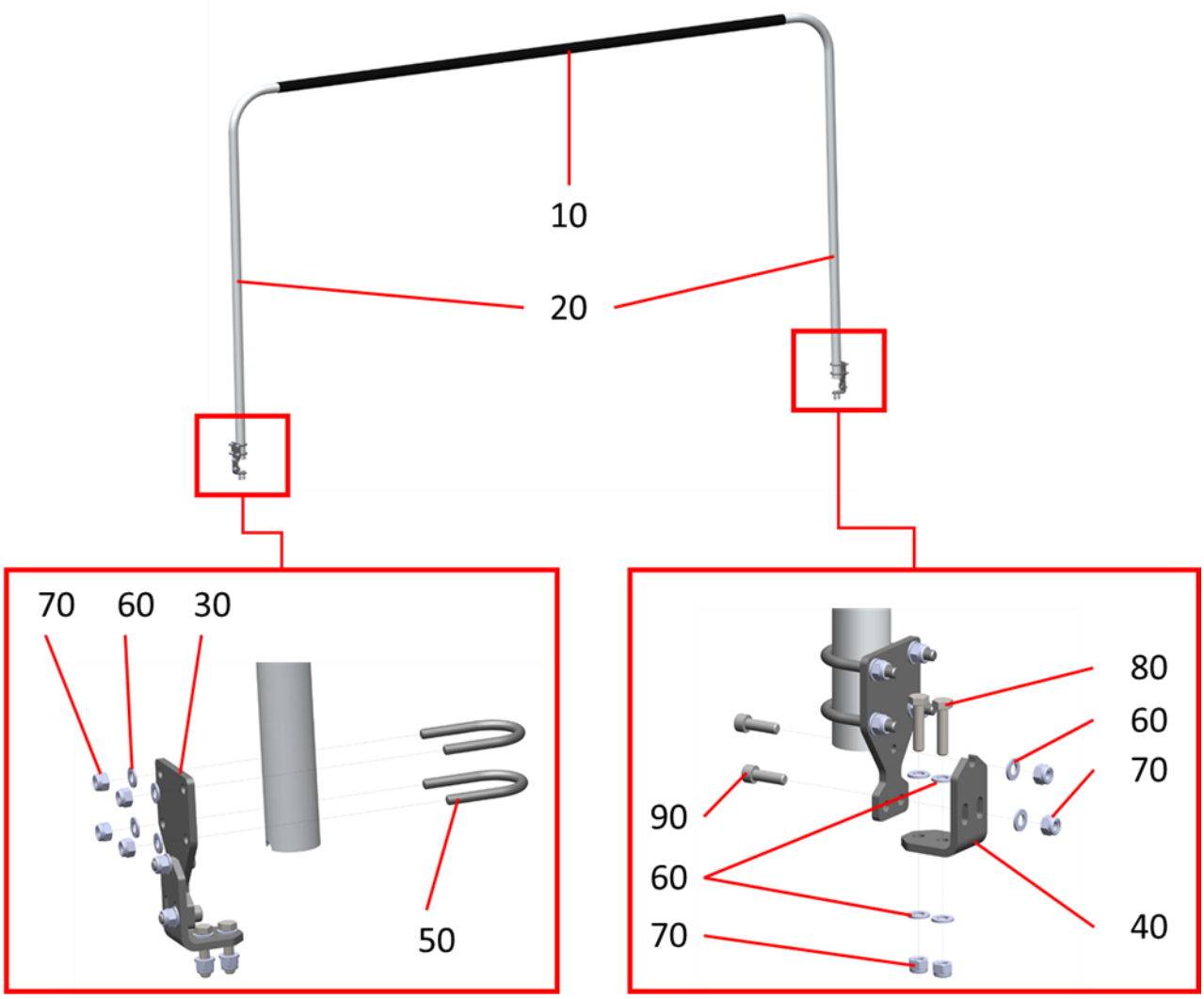

Pos.	Component	Description
10	Cable conduit plastic 47x2x2600	
20	Cable conduit bent 42x1,5	
30	Holder cable guide. Bl 6x125x72	
40	Hinge Bl 6x116x40	
50	Bracket galv. A44-8-74	
60	Washer A8.4-200HV	
70	Hexagon nut, M8-8 self-locking	
80	Hex screw M8×30-8.8	Tightening torque 20 Nm
90	Cheese head screw M8x25-8.8	Tightening torque 20 Nm

MA STAR 5.5 / 6.5

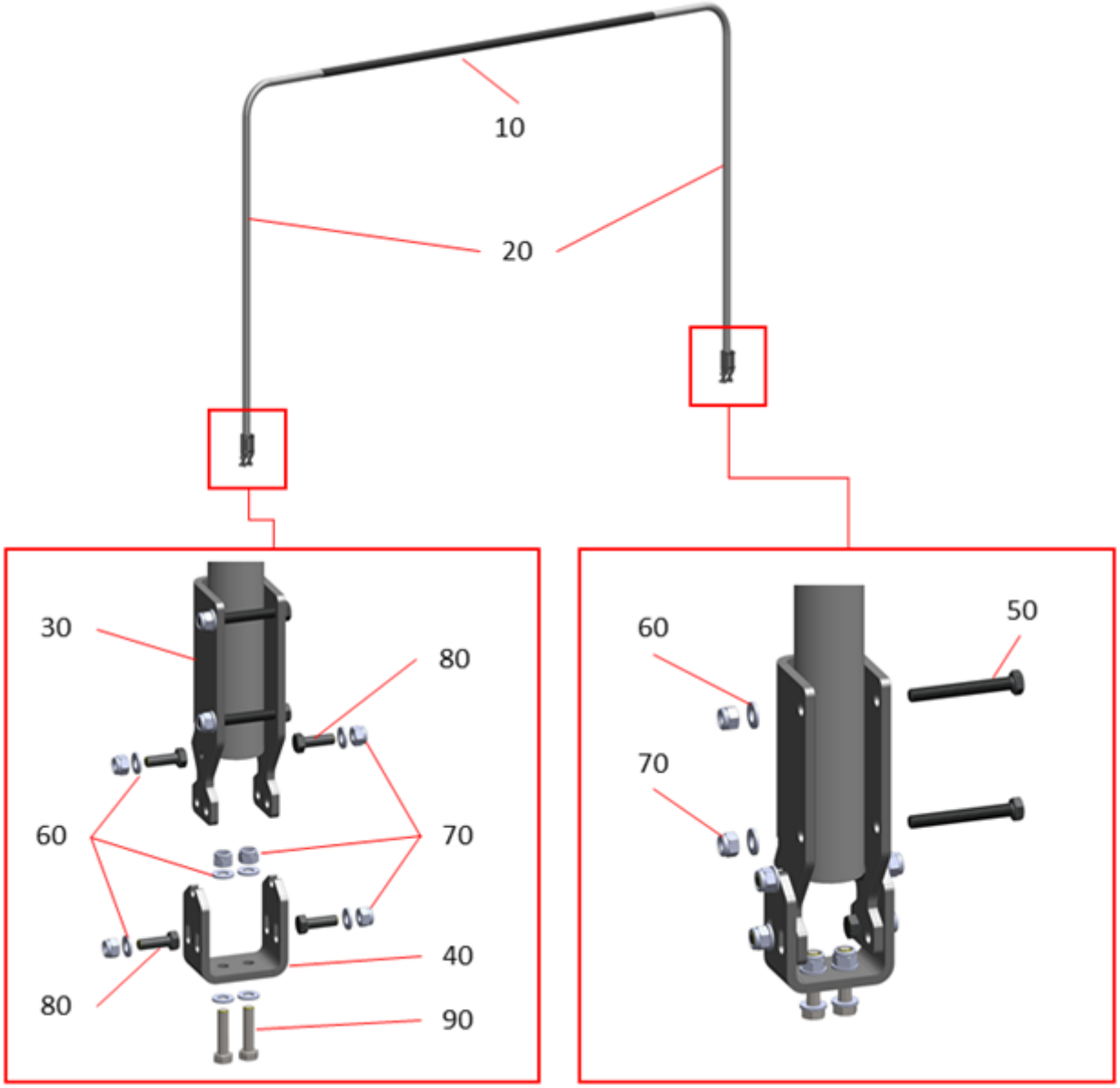

Pos.	Component	Description
10	Cable conduit plastic 47x2x2600	
20	Cable conduit bent 42x1,5	
30	Holder cable tube BL 6x180x156	
40	Hinge BL 6x191x40	
50	Hexagon head screw M8x65-8.8	
60	Washer A8.4-200HV	
70	Hexagon nut M8-8 galv. self-locking	
80	Hexagon head screw M8x25-8.8	Tightening torque 20 Nm
90	Hex screw M8×35-8.8	Tightening torque 20 Nm

15.5 Cover Hood

MA STAR 3.5

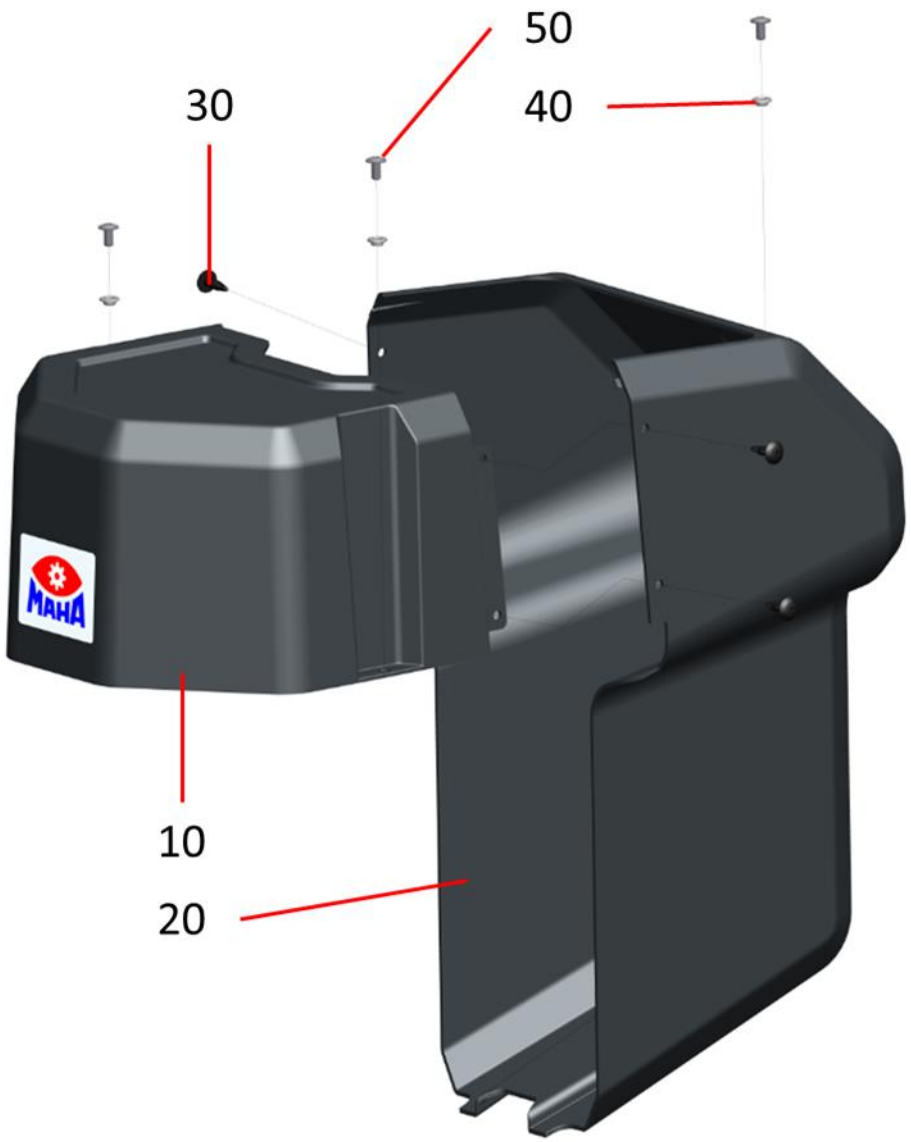

Pos.	Component	Description
10	Cover	front
20	Cover	rear
30	Expanding rivet	LSBN 6,5x8,5
40	Socket w. collar	6,5x8,5x13x4,5
50	Flat head screw	M6x12-10.9

MA STAR 5.5 / 6.5

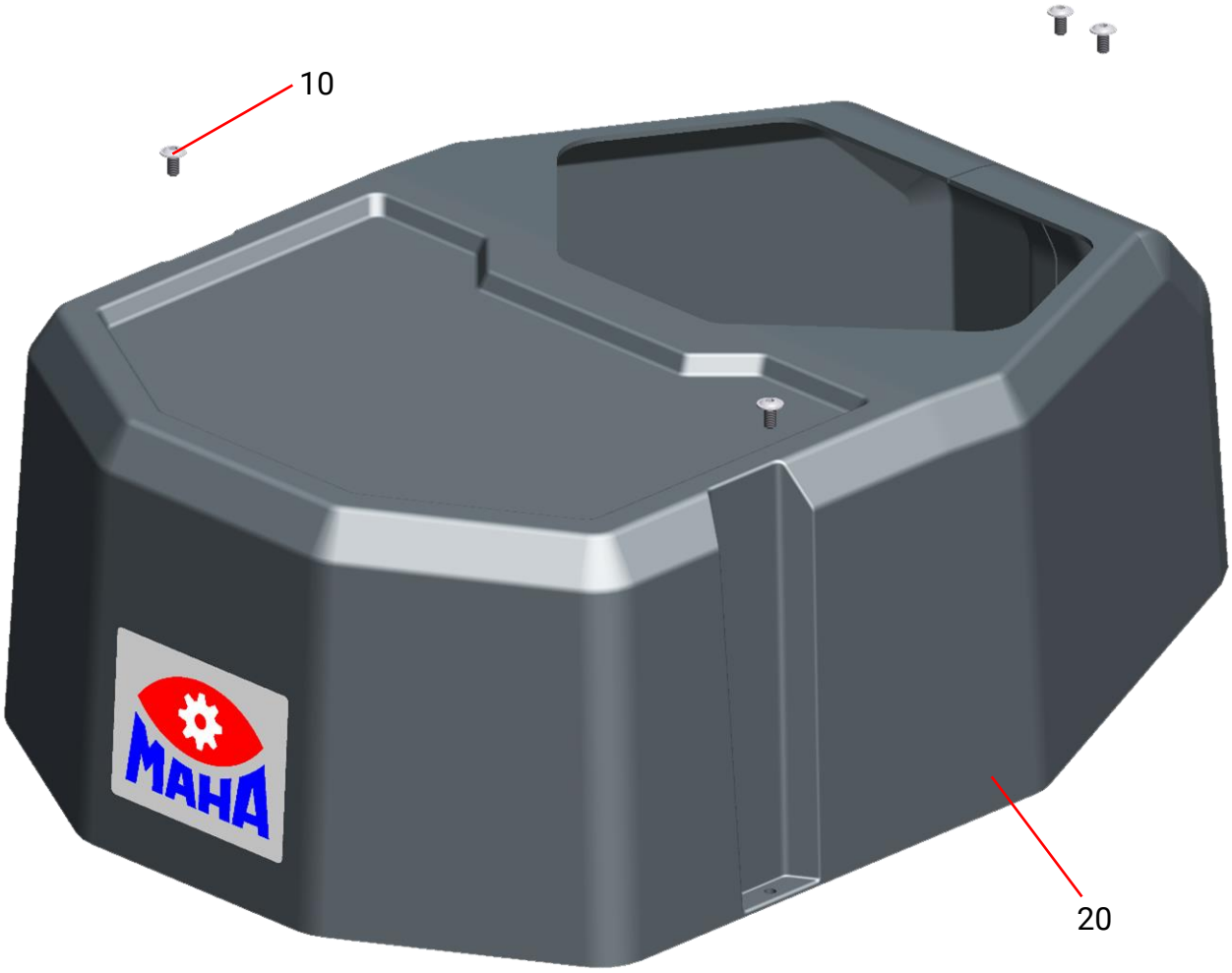

Pos.	Component	Description
10	Cover complete MA STAR 5.5	
20	Flat head screw	M6x12-10.9

16 Annex

See following page(s).

16.1 Electric Circuit Diagrams

Number	Page count	Model	Voltage, frequency
228.01.005783	22	MA STAR 3.5 Standard voltage	3x 380-400 V, 50/60 Hz
228.01.005823	20	MA STAR 3.5 Special voltage	3x 220-230 V, 50/60 Hz
228.01.005813	23	MA STAR 5.5 / 6.5 Standard voltage	3x 400 V, 50 Hz

16.2 Product Data Sheets and Foundation Plans

Number	Page count	Document	Model
F4770	1	Product data sheet	MA STAR 3.5 A
F4771	1	Foundation plan	MA STAR 3.5 A
F4772	1	Foundation plan	MA STAR 3.5 A with mounting plates
F4773	1	Product data sheet	MA STAR 3.5 S
F4774	1	Foundation plan	MA STAR 3.5 S
F4775	1	Foundation plan	MA STAR 3.5 S with mounting plates
F4776	1	Product data sheet	MA STAR 3.5 BMW
F4778	1	Product data sheet	MA STAR 3.5 MB
F4790	3	Product data sheet	MA STAR 5.5 Standard
F4791	1	Foundation plan	MA STAR 5.5 Standard
F4792	3	Product data sheet	MA STAR 5.5 slim
F4793	1	Foundation plan	MA STAR 5.5 slim
F4794	3	Product data sheet	MA STAR 5.5 wide
F4795	1	Foundation plan	MA STAR 5.5 wide
F4797	3	Product data sheet	MA STAR 6.5 Standard
F4798	1	Foundation plan	MA STAR 6.5 Standard
F4799	3	Product data sheet	MA STAR 6.5 wide
F4800	1	Foundation plan	MA STAR 6.5 wide

16.3 Anchor Points

Number	Page count	Model
F4780	1	MA STAR 3.5 S
F4781	1	MA STAR 3.5 A
F4796	1	MA STAR 5.5
F4801	1	MA STAR 6.5

16.4 Declarations of Conformity

Number	Page count	Model	VP number
CE364501-en	1	MA STAR 3.5 A	VP 251230 + VP 251232
		MA STAR 3.5 A BMW	VP 251234
		MA STAR 3.5 A MB	VP 251235
		MA STAR 3.5 S	VP 251231 + VP 251233
CE364601-en	1	MA STAR 5.5	VP 451186 + VP 451187
		MA STAR 5.5 MB	VP 451188
CE364701-en	1	MA STAR 6.5	VP 451189 + VP 451190

Electric Circuit Diagrams

MAHA Group GmbH
Hoyen 20
D 87490 Haldenwang (Allgäu)

Equipment designation: 2-Post Lift
Drawing number : 228.01.005783A

- Additional operating panel
- Ceiling light barrier
- Power set 230V 16A
- Buzzer with variable loudness
- 3x 380-400V, N (220V), PE, 60Hz

Dieser Schaltplan wurde für den maximalen Ausbau der Maschine erstellt. Optionsbedingt können Abweichungen zwischen Steuerung und Schaltplan vorhanden sein.
This circuit diagram is intended for machines equipped with all options. Options appearing in the circuit diagram need not necessarily be present in the control unit.

Power supply : 3x 400V, N, PE, 50Hz
Fuse protection : C 16A + RCD(30mA)

Created on : 02.09.2019 by: BFU
Last modified : 11.11.2020 by: BFU

Serial Number

SN + Barcode

Table of contents

INHALT_MAHA_SERIE_01

Information to the electical diagram

- Explanation of the reference marking (RKZ) according to DIN EN 81346:
  Symbol " =" meant: Type of the plant
  Symbol " +" meant: Location of the construction unit
  Symbol " - " meant: Designation of the construction unit

  Example:

The valve is mounting un the

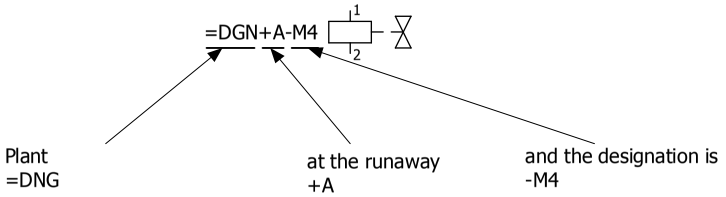

Since our plants and their controls can be assigned clearly, it is to be let be omitted permitted with the RKZ the plant designation. The RKZ will look as follows in our plants:

+A-M4

A construction unit on a electrical diagram page is drawn in, in whose header "+S" , must the place name is registered "+S" before the designation of the construction unit are set.

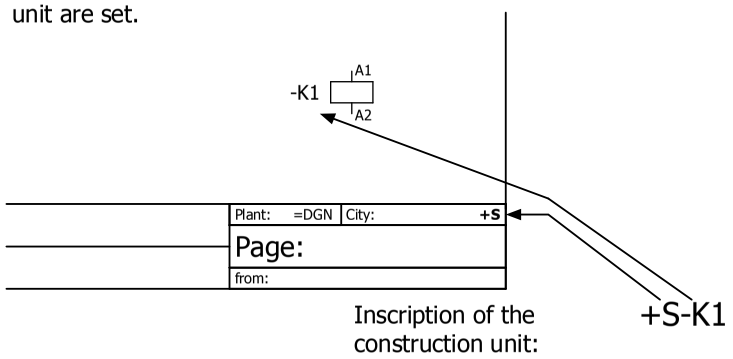

If a local box is drawn around a construction unit, then this has always priority, before the header

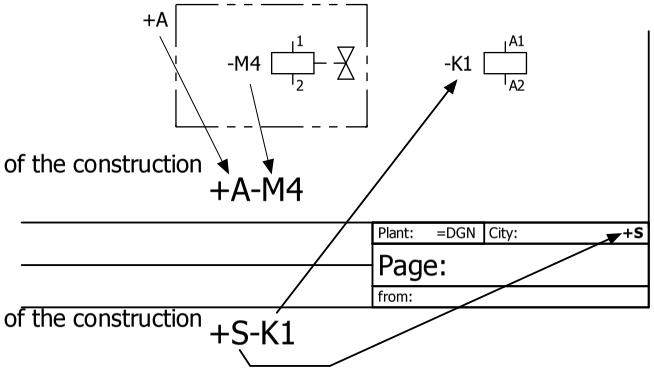

Another type of representation permits a doing without the local box.
The describing place must be set before the construction unit designation:

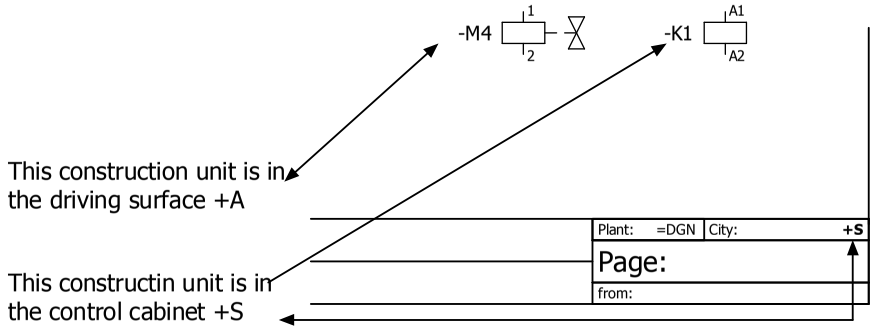

In this plant the following place names are relevant:
"+S" - Switchgear cabinet
"+A" - Driving surface / Post
"+B" - Driving surface / Post
"+C" - Hydraulic aggregate
"+D" - outside of the equipment
"+S1" - external control unit
"+S2" - foot control unit

Information to the electical diagram

Achtung!
Für alle Anlagenteile sind seperate Potentialausgleichsleiter in den Schaltschrank zu führen und dort zu erden.

Caution!
Route seperate potential equalization wires for all components into the control cabinet and attach them to the grounding terminals.

Der Inhalt dieses Schaltplans wurde sorgfältig auf Richtigkeit geprüft. Trotzdem können Fehler nicht vollständig ausgeschlossen werden. Technische Änderungen ohne Vorankündigung jederzeit vorbehalten.

The contents of this circuit diagram have been checked with great care. However, errors cannot be fully excluded. Subject to technical change without notice.

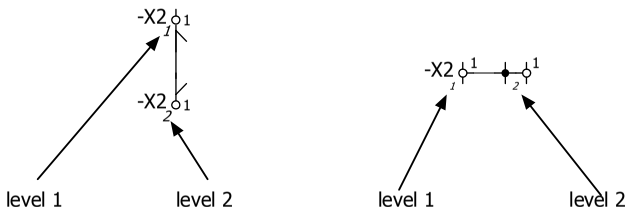

Legend of the color of conductor

BK = Schwarz / Black / Noir / Nero
BN = Braun / Brown / Maron / Marone
RD = Rot / Red / Rouge / Rosso
OG = Orange / Orange / Orange / Arancia
YE = Gelb / Yellow / Jaune / Giallo
GN = Grün / Green / Vert / Verde
BU = Blau / Blue / Bleu / Blu
VT = Violett / Violet / Violet / Viola
GY = Grau / Grey / Gris / Grigio
WH = Weiss / White / Blanc / Bianco
PK = Rosa / Pink / Rose / Rosa

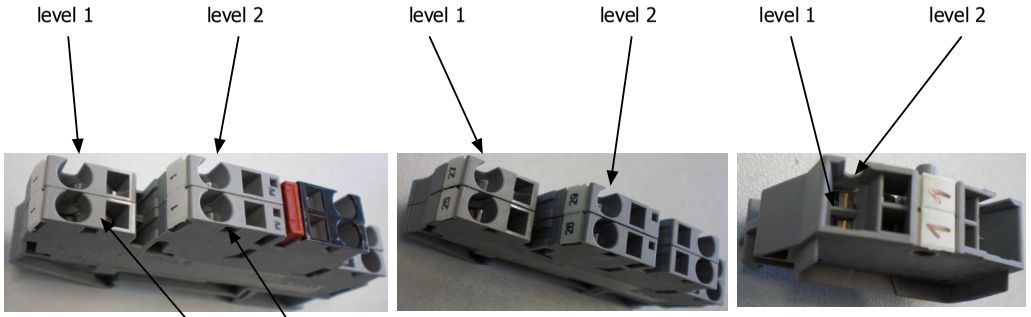

Pictograph and signal word

	Danger!	Danger of personal injury through dangerous electrical voltage. Reference to an imminent danger that may result in death or serious personal injury if the corresponding measures are not taken.
	Danger!	Danger of personal injury through a general source of danger. Reference to an imminent danger that may result in death or serious personal injury if the corresponding measures are not taken.
	Note!	Important note to ensure troublefree operation

Klemmleiste
+S-X2
Klemmleiste im Schaltschrank 24VDC

Kabelname	Kabeltyp	Zielbezeichnung	Anschluss	Klemme	Etage	Brücke	Zielbezeichnung	Anschluss	Kabeltyp	Kabelname
W:20.SC	YSLY-JZ 7x1,0 mm²	-A1.0-X8	-X9:2	1	1				YSLY-JZ 10x0,75 mm²	W:30.SC2
W:32.2SC2	YSLY-JZ 7x1,0 mm²	+C1-X30	1	1	2		+C2-X30	1	YSLY-JZ 7x1,0 mm²	W:20.SC
W:70.SC2	YSLY-OZ 4x0,75 mm²	+C-X34	1	1	1		+C-X20	1	YSLY-OZ 4x0,75 mm²	W:70.SC
W:34.SC	YSLY-JZ 5x0,75 mm²	-A200	A1+	1	2				YSLY-OZ 4x0,75 mm²	W:70.SC1
W:30.SC1	YSLY-JZ 16x0,75 mm²	+C2-X70	1	1	1		+C-X70	1		
Kabelname	Kabeltyp			1	2		+C1-X70	1		

Last modified	08.10.2020	2-Post Lift MA STAR 3.5	General information on this circuit diagram	228.01.005783A	Plant: =MAS	
Last editor	BFU				Installation site:	Page: 4
					Location: +DOKU	From: 22

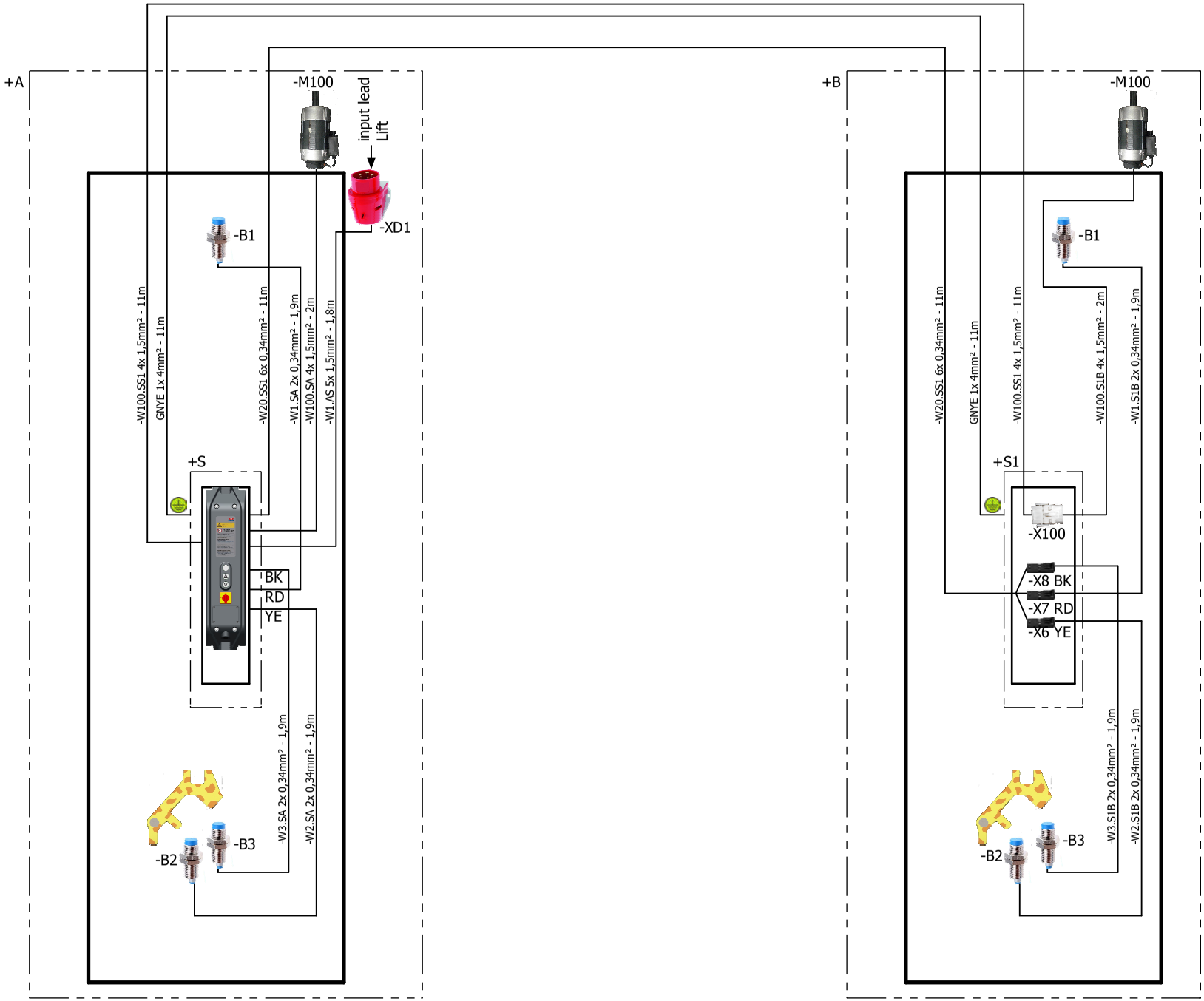

Operating side
Post +A

Opposite side
Post +B

Last modified	08.10.2020	2-Post Lift MA STAR 3.5	Equipment overview	228.01.005783A	Plant: =MAS	
Last editor	BFU				Installation site:	Page: 5
					Location: +DOKU	From: 22

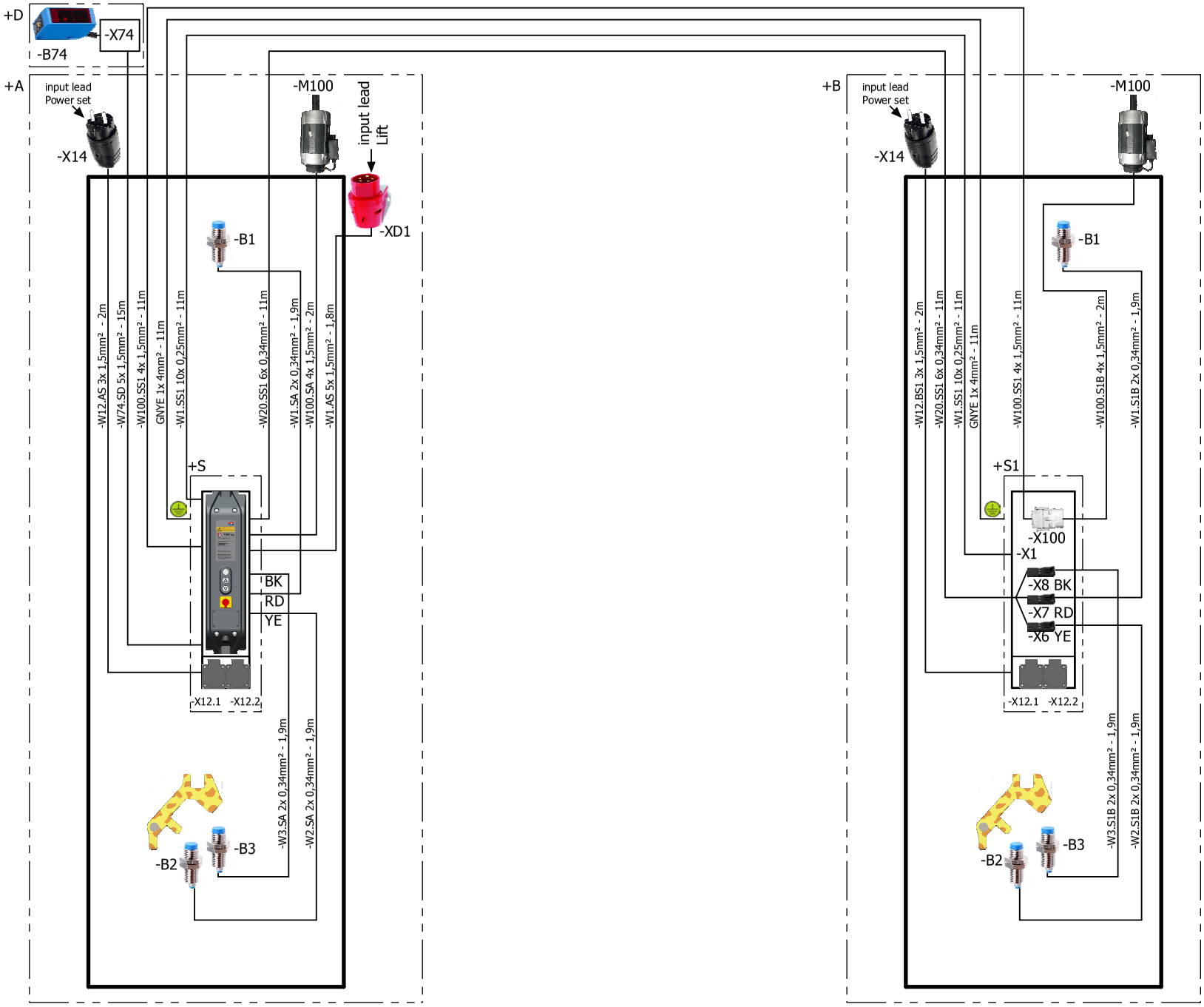

Last modified	02.11.2020	2-Post Lift MA STAR 3.5	Equipment overview Option Additional operating panel Option Power set	228.01.005783A	Plant: =MAS Installation site: Location: +DOKU
Last editor	BFU				Page: 6 From: 22

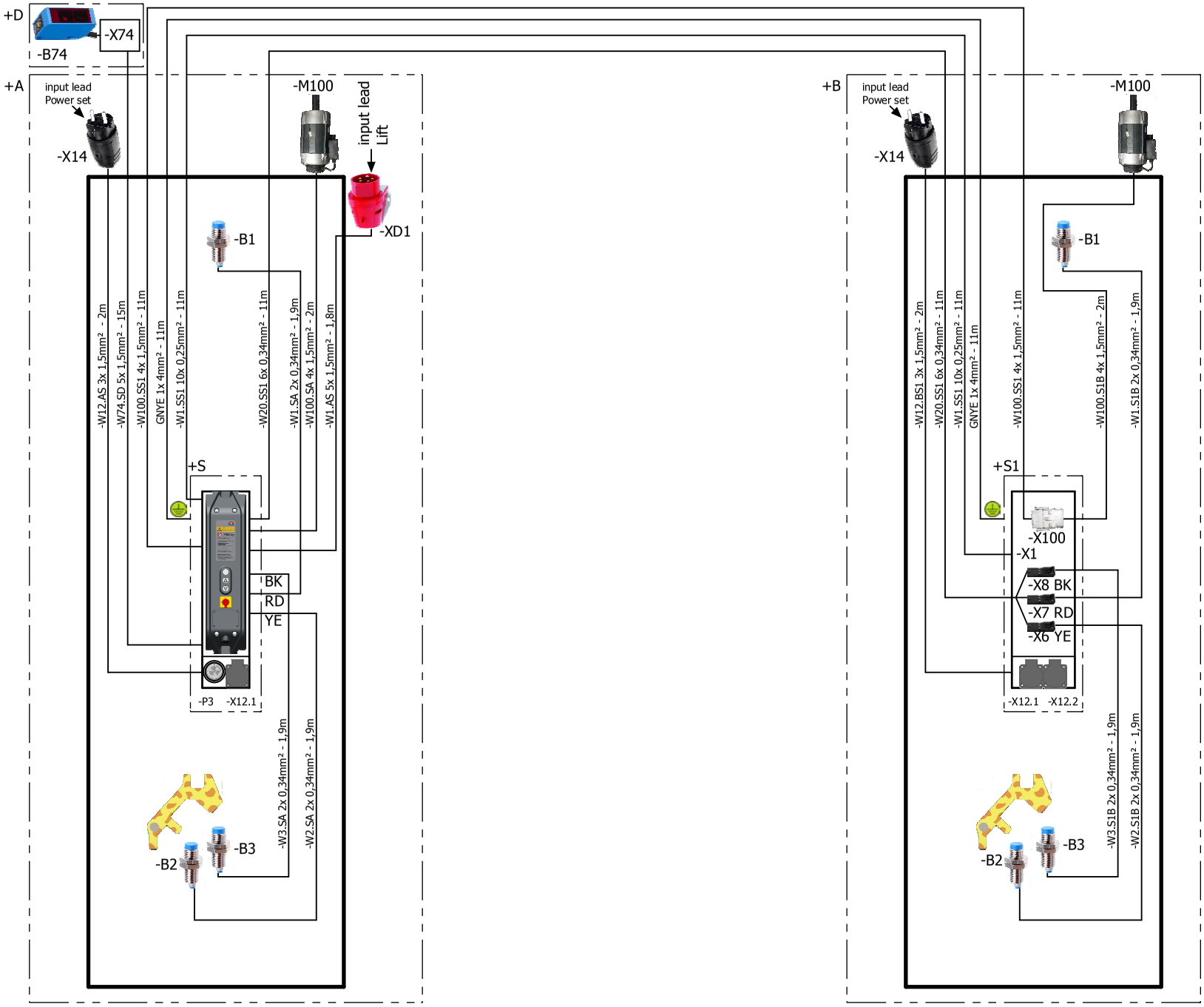

Last modified	02.11.2020	2-Post Lift MA STAR 3.5	Equipment overview Option Additional operating panel Option Power set Option Buzzer with variable loudness Horn	228.01.005783A	Plant: =MAS Installation site: Location: +DOKU
Last editor	BFU				Page: 7 From: 22

NORMBL_MAHA_SERIE_05

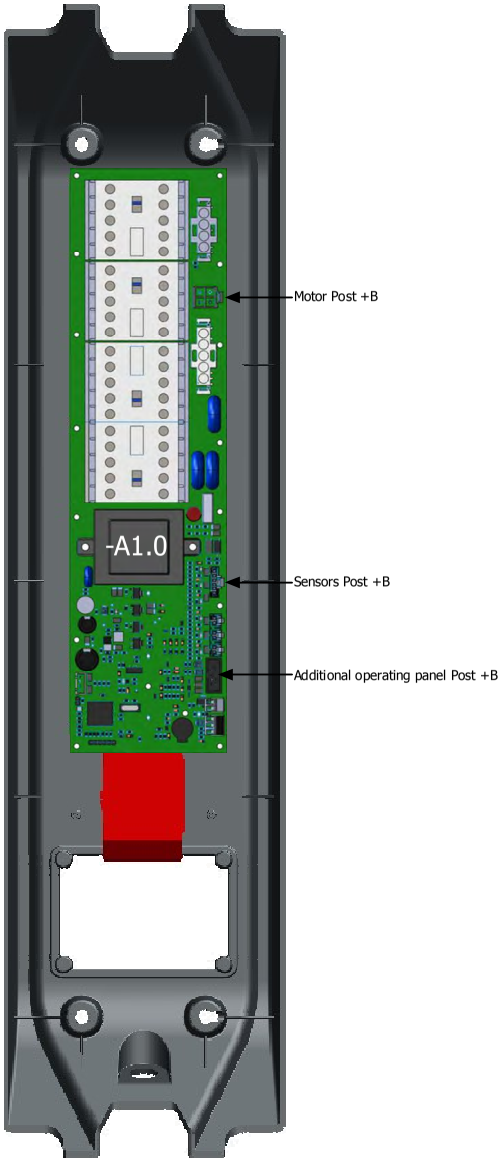

Last modified	08.10.2020	2-Post Lift MA STAR 3.5	Operation panel Post +A	228.01.005783A	Plant: =MAS	
Last editor	BFU				Installation site:	Page: 8
					Location: +DOKU	From: 22

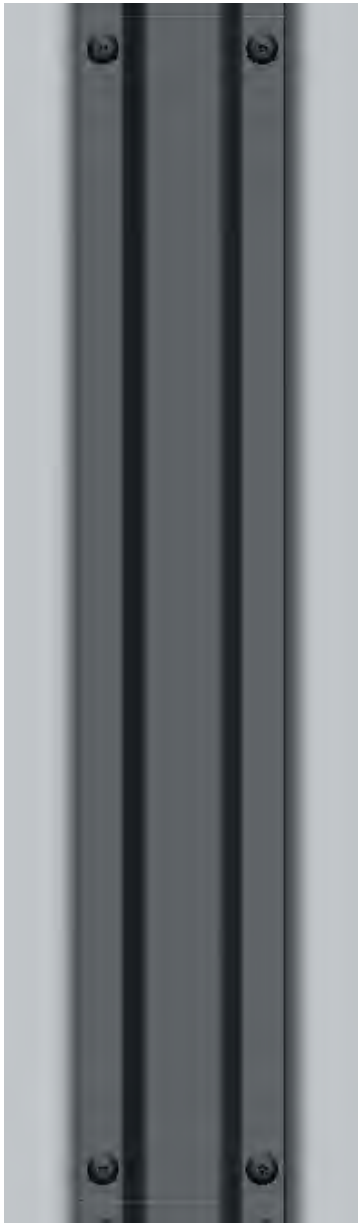

OPTION: Additional operating panel

8

+S/10

Last modified	08.10.2020	2-Post Lift MA STAR 3.5	Cabinet Post +B OPTION: Additional operating panel	228.01.005783A	Plant: =MAS	
Last editor	BFU				Installation site:	Page: 9
					Location: +DOKU	From: 22

NORMBL_MAHA_SERIE_05

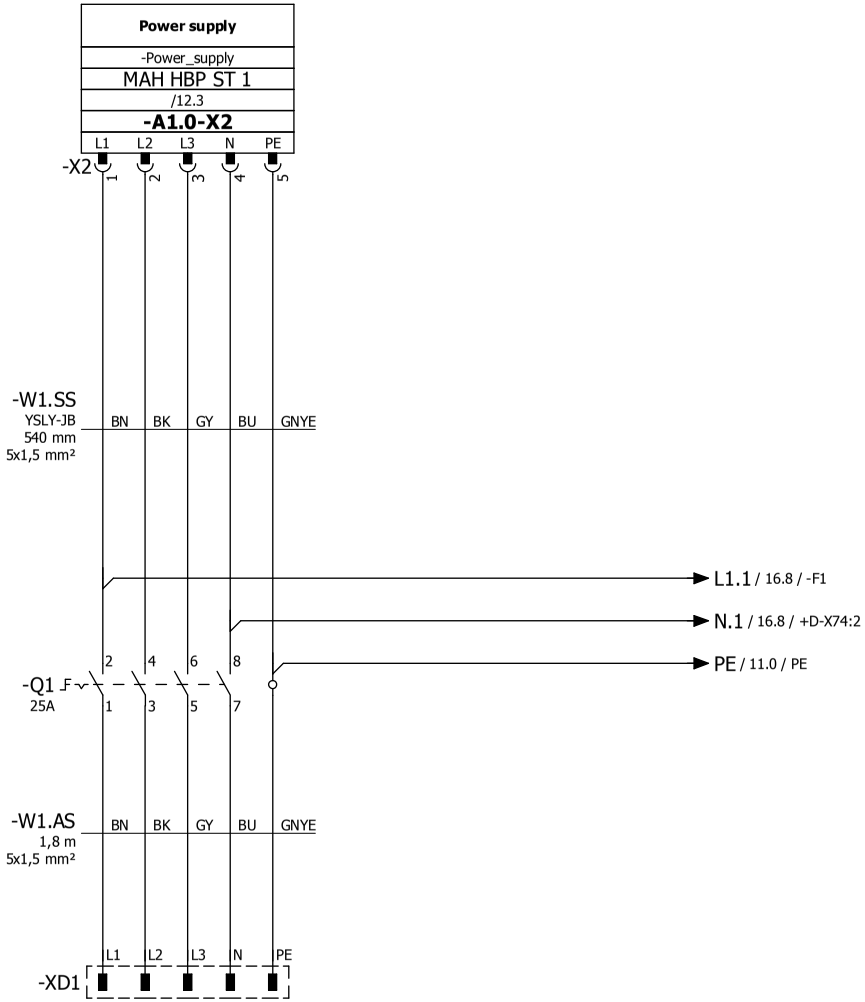

Power supply

ATTENTION !

Voltage also present when master switch is turned off

Voltage: **3x400V, N, PE, 50Hz**
Option 3x380-400V, N(220V), PE, 60Hz

Fuse protection by the building contractor: **C 16A + RCD(30mA)**

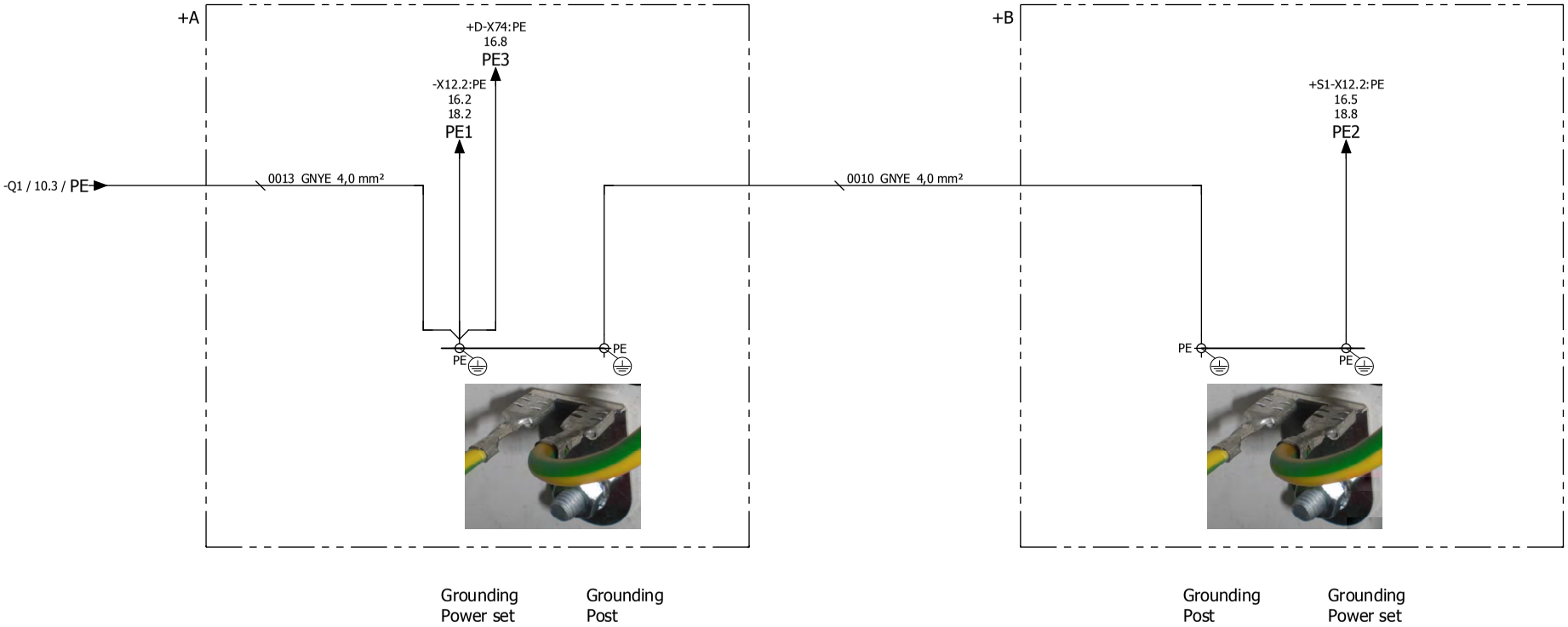

Last modified	10.11.2020	2-Post Lift MA STAR 3.5	Grounding	228.01.005783A	Plant: =MAS	
Last editor	BFU				Installation site:	Page: 11
					Location: +S	From: 22

-A1.0

board MAH HBP ST1

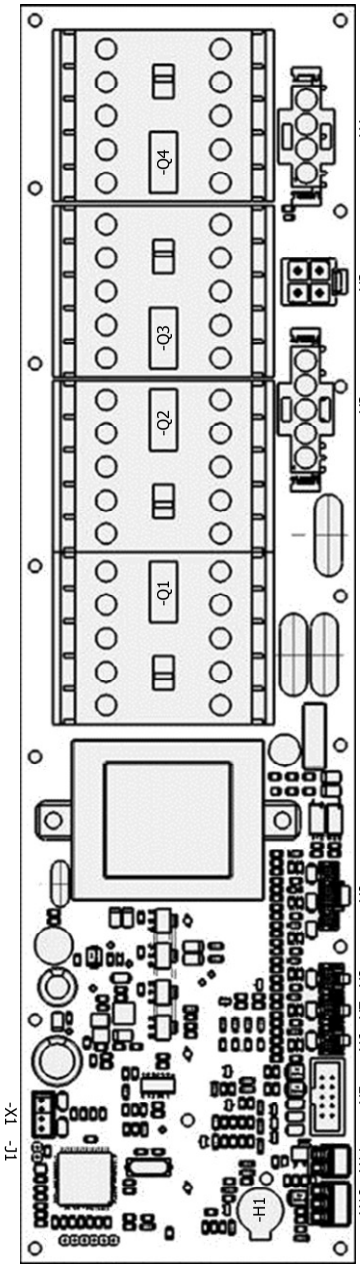

OUTPUT

X4:	-Motor1_PE	/14.3	Motor Post +A
	-Motor1_L1	/14.3	Motor Post +A
	-Motor1_L3	/14.2	Motor Post +A
	-Motor1_L2	/14.2	Motor Post +A
X3:	-Motor2_PE	/14.7	Motor Post +B
	-Motor2_L2	/14.7	Motor Post +B
	-Motor2_L1	/14.6	Motor Post +B
	-Motor2_L3	/14.6	Motor Post +B

INPUT

X2:	-Power_supply_PE	/10.2	Power supply
	-Power_supply_N	/10.1	Power supply
	-Power_supply_L3	/10.1	Power supply
	-Power_supply_L2	/10.1	Power supply
	-Power_supply_L1	/10.1	Power supply
X9:	-signal_nut_breakage2	/15.8	+B-B3 Nut breakage monitoring
	+8V_nut_breakage2	/15.9	+B-B3 Nut breakage monitoring
	-signal_pulse_generator2	/15.7	+B-B1 Leveling monitoring
	+8V_pulse_generator2	/15.7	+B-B1 Leveling monitoring
	-signal_limit_switch2	/15.5	+B-B2 Lift in home position
	+8V_limit_switch2	/15.6	+B-B2 Lift in home position
X8:	-signal_nut_breakage1	/15.3	+A-B3 Nut breakage monitoring
	+8V_nut_breakage1	/15.4	+A-B3 Nut breakage monitoring
X7:	-signal_pulse_generator1	/15.2	+A-B1 Leveling monitoring
	+8V_pulse_generator1	/15.2	+A-B1 Leveling monitoring
X6:	-signal_limit_switch1	/15.0	+A-B2 Lift in home position
	+8V_limit_switch1	/15.1	+A-B2 Lift in home position
X5:	-emergency_stop_OUT1		
	-emergency_stop_IN1		
	-emergency_stop_OUT2		
	-emergency_stop_IN2		
	-button_up_external		
	-button_down_external		
	-LED_red		
	-LED_blue_middle		
	-LED_blue_lower		
	-GND_opposite_side		
X11:	-signal_buzzer	/17.1	-P1 horn
	+24VDC_buzzer	/17.1	-P1 horn
X10:	-signal_light_barrier	/16.9	+D-W74 Light barrier
	+24VDC_light_barrier	/16.8	+D-W74 Light barrier
X1:	-GND_RS232		
	-TxD_RS232		
	-RxD_RS232		
	+5V_RS232		

Jumper removed

Option:
zusätzliche Bedieneinheit
Säule +B

10x0,25 mm²

-A1.0-X5:1	BK	BK
-A1.0-X5:2	VT	VT
-A1.0-X5:3	BU	BU
-A1.0-X5:4	RD	RD
-A1.0-X5:5	GY	GY
-A1.0-X5:6	PK	PK
-A1.0-X5:7	GN	GN
-A1.0-X5:8	YE	YE
-A1.0-X5:9	WH	WH
-A1.0-X5:10	BN	BN

→ -W1.SS1 / 13.4 / +S1-A2.0-X1:-X1:10

11 13

Last modified	11.11.2020	2-Post Lift MA STAR 3.5	Overview Control board MAH HBP ST 1	228.01.005783A	Plant: =MAS
Last editor	BFU				Installation site:
					Location: +S

Page: 12
From: 22

NORMBL_MAHA_SERIE_05

Option: Additional operating panel Post +B

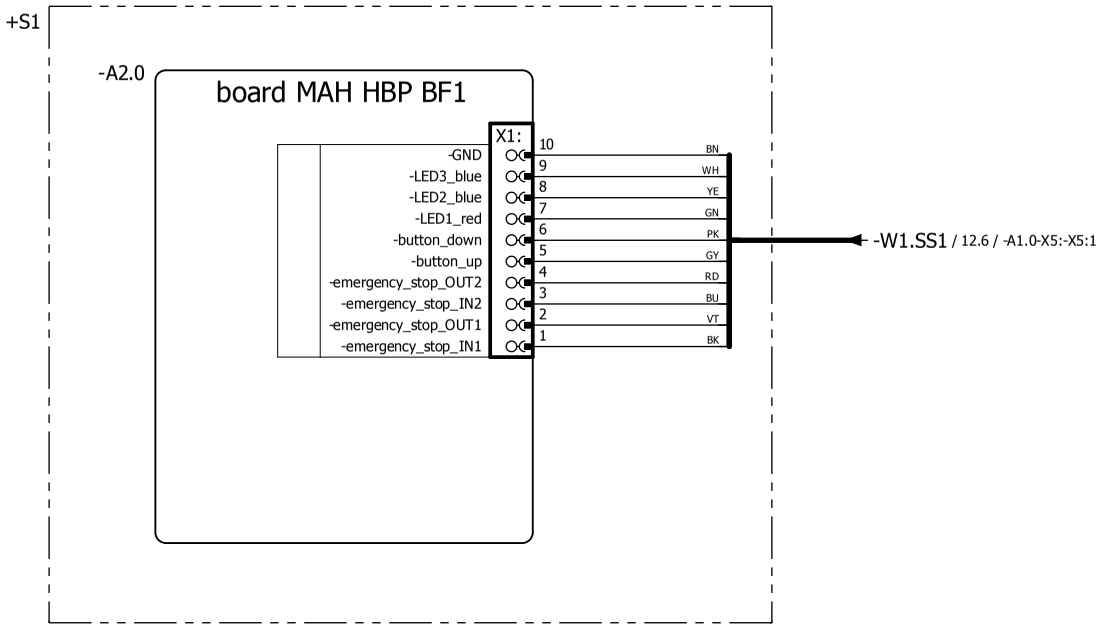

Last modified	08.10.2020	2-Post Lift MA STAR 3.5	Option: Overview Additional operating panel MAH HBF BF 1	228.01.005783A	Plant: =MAS	
Last editor	BFU				Installation site:	Page: 13
					Location: +S	From: 22

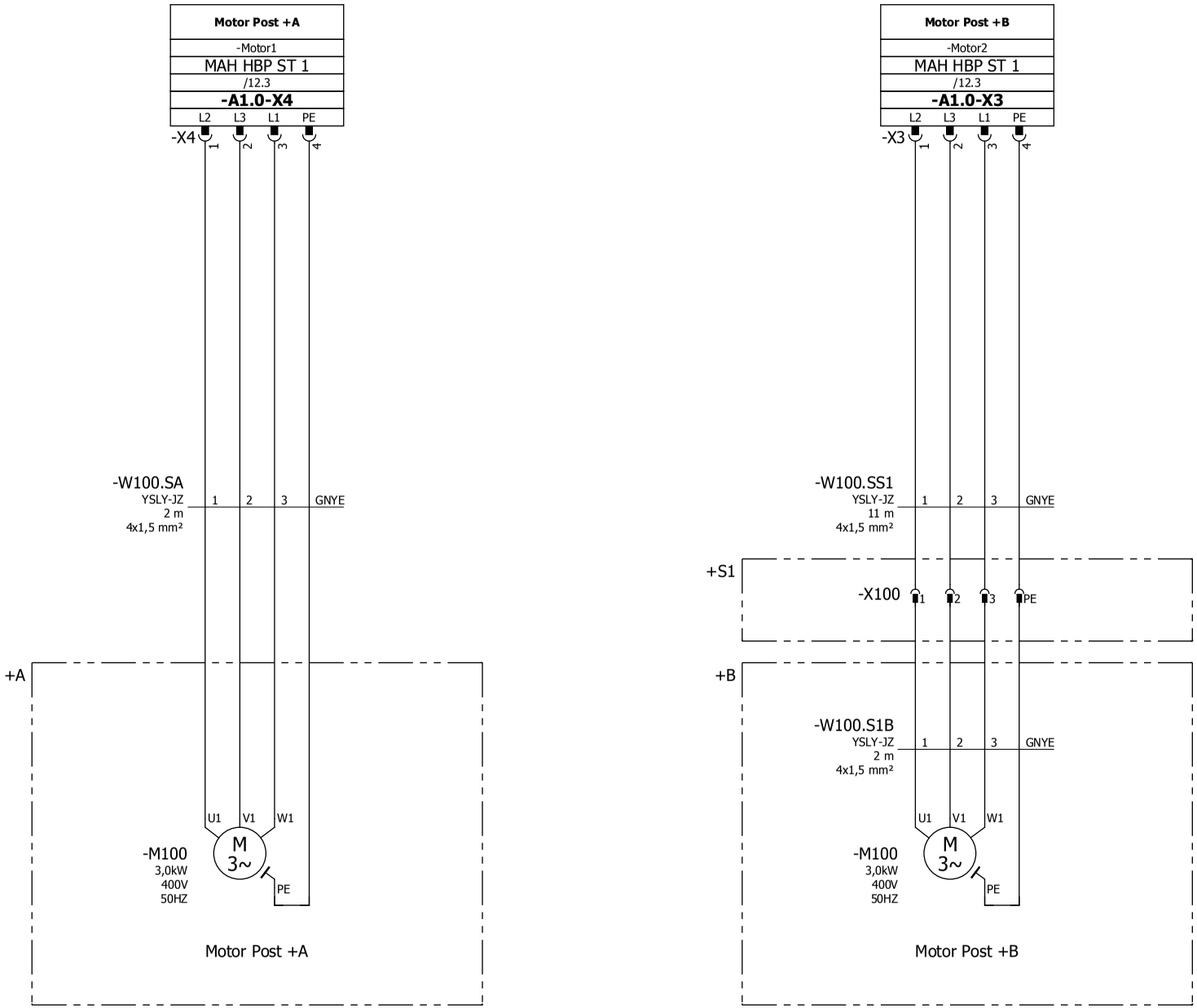

13 15

Last modified	08.10.2020	2-Post Lift MA STAR 3.5	basic functions	228.01.005783A	Plant: =MAS	
Last editor	BFU				Installation site:	Page: 14
					Location: +S	From: 22

NORMBL_MAHA_SERIE_05

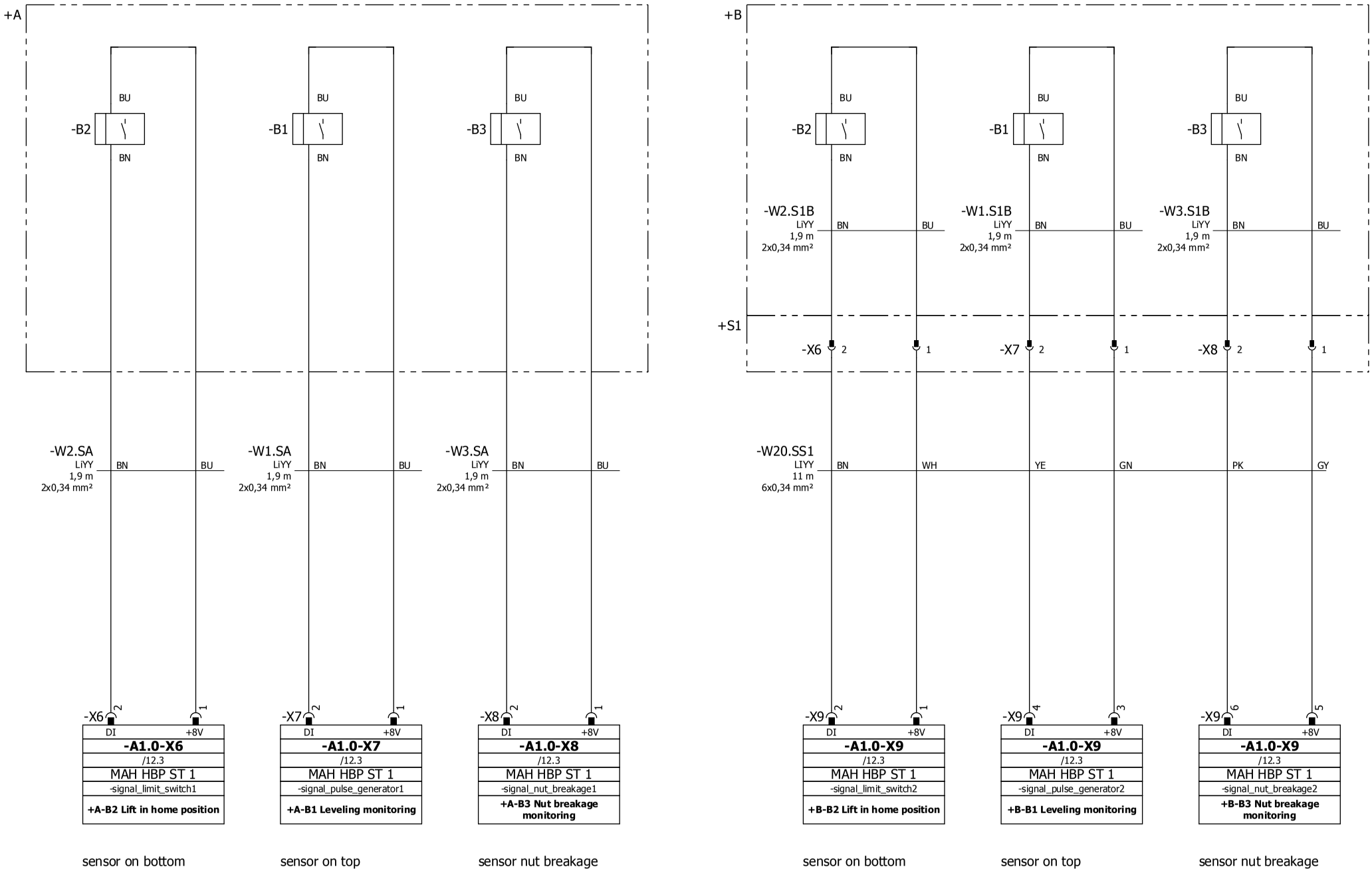

Last modified	08.10.2020	2-Post Lift MA STAR 3.5	basic functions	228.01.005783A	Plant: =MAS	
Last editor	BFU				Installation site:	Page: 15
					Location: +S	From: 22

NORMBL_MAHA_SERIE_05

Option: Power set

+A

CAUTION Separate source voltage!
Power supply provided
by the customer
Fuse protection 16A + RCD (30mA)

-X14 L PE N

PE
11.2
PE1

-W12.AS
YSLY-JB
2 m
3x1,5 mm²
BN GNYE BU

0012 GNYE 1,5 mm²

0005 BU 1,5 mm²
0006 GNYE 1,5 mm²
0004 BK 1,5 mm²

-X12.1 L PE N
250 VAC
max.16A

-X12.2 L PE N
250 VAC
max.16A

CAUTION !
Voltage also present
when master switch
is turned off

Shockproof socket
max. 250VAC / 16A

+B

CAUTION Separate source voltage!
Power supply provided
by the customer
Fuse protection 16A + RCD (30mA)

-X14 L PE N

PE
11.7
PE2

+S1

-W12.BS1
YSLY-JB
2 m
3x1,5 mm²
BN GNYE BU

0011 GNYE 1,5 mm²

0008 BU 1,5 mm²
0009 GNYE 1,5 mm²
0007 BK 1,5 mm²

-X12.1 L PE N
250 VAC
max.16A

-X12.2 L PE N
250 VAC
max.16A

CAUTION !
Voltage also present
when master switch
is turned off

Shockproof socket
max. 250VAC / 16A

Option: Ceiling light barrier

+D

-B74
function:
lightswitching
BN WH
BU GY BK

-W74.DD
2 m
4x1 mm²
WH BN BU GY BK

-X74 3 1 PE 2 5 4

-W74.SD
YSLY-JB
15 m
5x1,5 mm²
GY BN GNYE BU BK

-F1
T5A

0017 BK 1,5 mm²

+A-PE3
11.2
PE

L1.1
10.3
-Q1:2

N.1
10.3
-Q1:8

-X10 1 2 3
+24V DI
-A1.0-X10
/12.3
MAH HBP ST 1
+24VDC_light_barrier
+D-W74 Light barrier

Ceiling light barrier

15 17

NORMBL_MAHA_SERIE_05

Last modified	02.11.2020	2-Post Lift MA STAR 3.5	Option: Power set Option: Ceiling light barrier	228.01.005783A	Plant: =MAS Installation site: Location: +S	Page: 16 From: 22
Last editor	BFU					

Option: Buzzer with variable loudness Horn

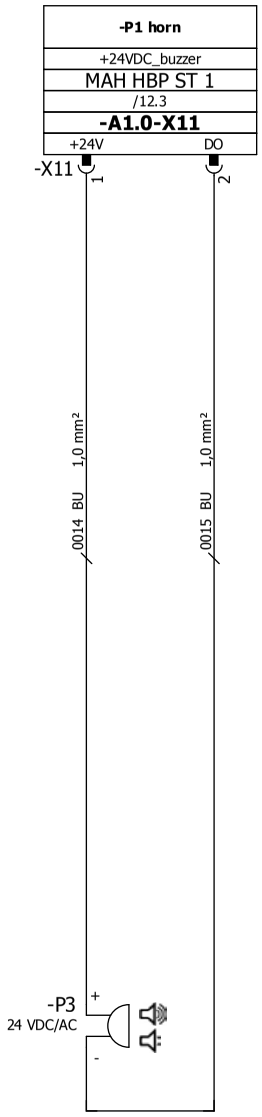

Last modified	08.10.2020	2-Post Lift MA STAR 3.5	Option: Buzzer with variable loudness Horn	228.01.005783A	Plant: =MAS	
Last editor	BFU				Installation site:	Page: 17
					Location: +S	From: 22

OPTION Power set + Buzzer with variable loudness Horn

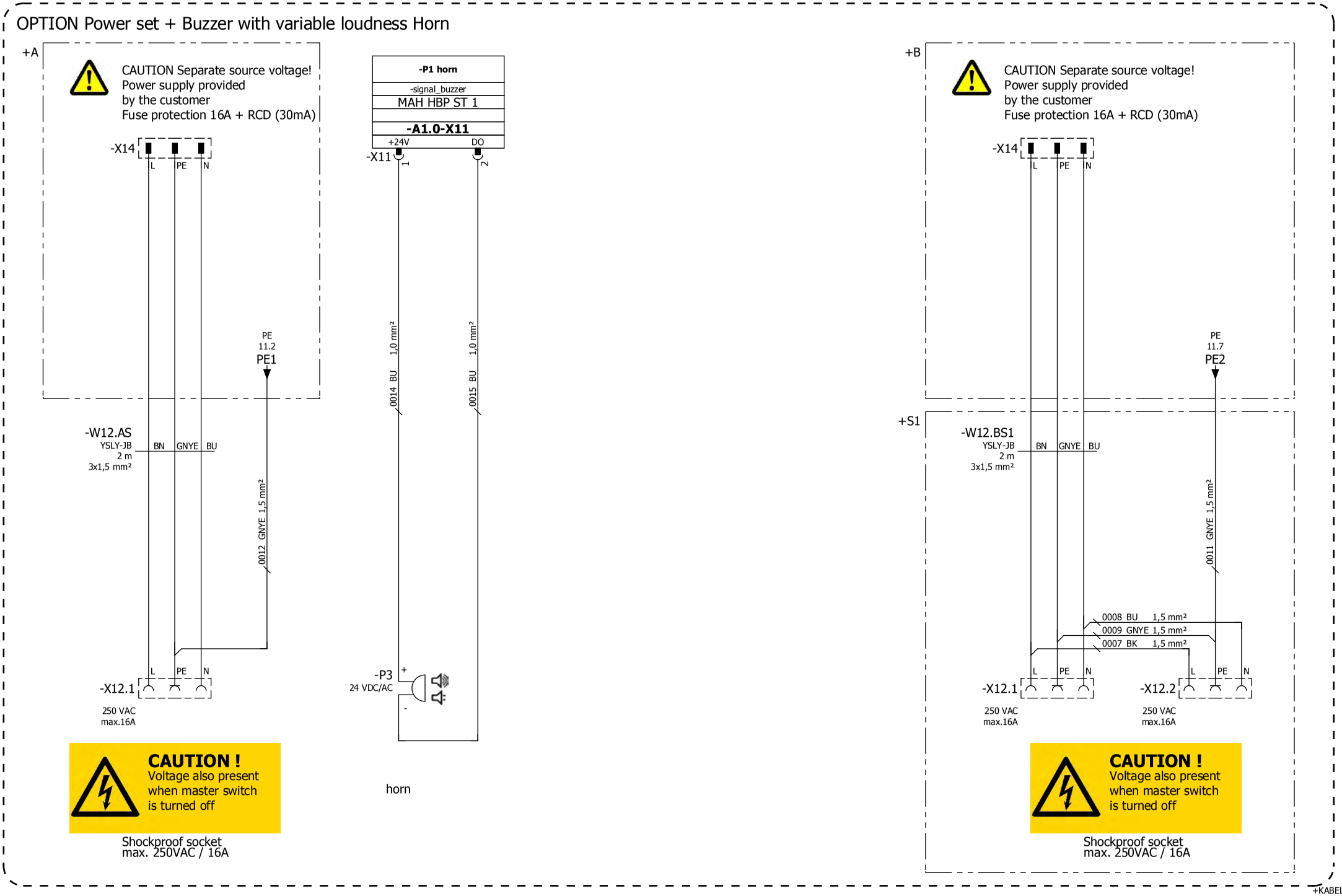

17

+KABEL/19

Last modified	08.10.2020	2-Post Lift MA STAR 3.5	Option: Power set + Buzzer with variable loudness Horn	228.01.005783A	Plant: =MAS	
Last editor	BFU				Installation site:	Page: 18
					Location: +S	From: 22

NORMBL_MAHA_SERIE_05

Cable diagram

KABEPL_MAHA_SERIE_05

Cable name	W1.AS	Cable type		No. of conductor	5	Cross-section	1,5 mm²	Cable length	1,8 m	Part number	
Function text	/ Page.Path	Target designation from	Connection point	Conductor	Target designation to	Connection point	/ Page.Path	Function text			
Power supply	=MAS+S/10.1	+S-Q1	3	**BK**	+S-XD1	L2	=MAS+S/10.1	Power supply			
=	=MAS+S/10.1	+S-Q1	1	**BN**	+S-XD1	L1	=MAS+S/10.1	=			
=	=MAS+S/10.1	+S-Q1	7	**BU**	+S-XD1	N	=MAS+S/10.1	=			
=	=MAS+S/10.2	+S-Q1		**GNYE**	+S-XD1	PE	=MAS+S/10.1	=			
=	=MAS+S/10.1	+S-Q1	5	**GY**	+S-XD1	L3	=MAS+S/10.1	=			

Cable name	W1.S1B	Cable type	LiYY	No. of conductor	2	Cross-section	0,34 mm²	Cable length	1,9 m	Part number	53 1082 1238420
Function text	/ Page.Path	Target designation from	Connection point	Conductor	Target designation to	Connection point	/ Page.Path	Function text			
sensor on top	=MAS+S/15.7	+S1-X7	2	**BN**	+B-B1	BN	=MAS+S/15.7				
=	=MAS+S/15.7	+S1-X7	1	**BU**	+B-B1	BU	=MAS+S/15.7				

Cable name	W1.SA	Cable type	LiYY	No. of conductor	2	Cross-section	0,34 mm²	Cable length	1,9 m	Part number	53 1082 1238420
Function text	/ Page.Path	Target designation from	Connection point	Conductor	Target designation to	Connection point	/ Page.Path	Function text			
+A-B1 Leveling monitoring	=MAS+S/15.2	+S-A1.0-X7	-X7:2	**BN**	+A-B1	BN	=MAS+S/15.2				
=	=MAS+S/15.2	+S-A1.0-X7	-X7:1	**BU**	+A-B1	BU	=MAS+S/15.2				

Cable name	W1.SS	Cable type	YSLY-JB	No. of conductor	5	Cross-section	1,5 mm²	Cable length	0,54 m	Part number	1400871
Function text	/ Page.Path	Target designation from	Connection point	Conductor	Target designation to	Connection point	/ Page.Path	Function text			
Power supply	=MAS+S/10.1	+S-A1.0-X2	-X2:2	**BK**	+S-Q1	4	=MAS+S/10.1	Power supply			
=	=MAS+S/10.1	+S-A1.0-X2	-X2:1	**BN**	+S-Q1	2	=MAS+S/10.1	=			
=	=MAS+S/10.1	+S-A1.0-X2	-X2:4	**BU**	+S-Q1	8	=MAS+S/10.1	=			
=	=MAS+S/10.2	+S-A1.0-X2	-X2:5	**GNYE**	+S-Q1		=MAS+S/10.2	=			
=	=MAS+S/10.1	+S-A1.0-X2	-X2:3	**GY**	+S-Q1	6	=MAS+S/10.1	=			

Cable name	W1.SS1	Cable type		No. of conductor	10	Cross-section	0,25 mm²	Cable length		Part number	1400656
Function text	/ Page.Path	Target designation from	Connection point	Conductor	Target designation to	Connection point	/ Page.Path	Function text			
	=MAS+S/12.5	+S-A1.0-X5	-X5:1	**BK**	+S1-A2.0-X1	-X1:1	=MAS+S/13.2				
	=MAS+S/12.5	+S-A1.0-X5	-X5:10	**BN**	+S1-A2.0-X1	-X1:10	=MAS+S/13.2				
	=MAS+S/12.5	+S-A1.0-X5	-X5:3	**BU**	+S1-A2.0-X1	-X1:3	=MAS+S/13.2				
	=MAS+S/12.5	+S-A1.0-X5	-X5:7	**GN**	+S1-A2.0-X1	-X1:7	=MAS+S/13.2				
	=MAS+S/12.5	+S-A1.0-X5	-X5:5	**GY**	+S1-A2.0-X1	-X1:5	=MAS+S/13.2				
	=MAS+S/12.5	+S-A1.0-X5	-X5:6	**PK**	+S1-A2.0-X1	-X1:6	=MAS+S/13.2				
	=MAS+S/12.5	+S-A1.0-X5	-X5:4	**RD**	+S1-A2.0-X1	-X1:4	=MAS+S/13.2				
	=MAS+S/12.5	+S-A1.0-X5	-X5:2	**VT**	+S1-A2.0-X1	-X1:2	=MAS+S/13.2				
	=MAS+S/12.5	+S-A1.0-X5	-X5:9	**WH**	+S1-A2.0-X1	-X1:9	=MAS+S/13.2				
	=MAS+S/12.5	+S-A1.0-X5	-X5:8	**YE**	+S1-A2.0-X1	-X1:8	=MAS+S/13.2				

Cable diagram

KABEPL_MAHA_SERIE_05

Cable name	Cable type	No. of conductor	Cross-section	Cable length	Part number
W2.S1B	**LiYY**	**2**	**0,34 mm²**	**1,9 m**	**53 1082** 1238420

Function text	/ Page.Path	Target designation from	Connection point	Conductor	Target designation to	Connection point	/ Page.Path	Function text
sensor on bottom	=MAS+S/15.5	+S1-X6	2	**BN**	+B-B2	BN	=MAS+S/15.5	
=	=MAS+S/15.6	+S1-X6	1	**BU**	+B-B2	BU	=MAS+S/15.5	

Cable name	Cable type	No. of conductor	Cross-section	Cable length	Part number
W2.SA	**LiYY**	**2**	**0,34 mm²**	**1,9 m**	**53 1082** 1238420

Function text	/ Page.Path	Target designation from	Connection point	Conductor	Target designation to	Connection point	/ Page.Path	Function text
+A-B2 Lift in home position	=MAS+S/15.0	+S-A1.0-X6	-X6:2	**BN**	+A-B2	BN	=MAS+S/15.0	
=	=MAS+S/15.1	+S-A1.0-X6	-X6:1	**BU**	+A-B2	BU	=MAS+S/15.0	

Cable name	Cable type	No. of conductor	Cross-section	Cable length	Part number
W3.S1B	**LiYY**	**2**	**0,34 mm²**	**1,9 m**	**53 1082** 1238420

Function text	/ Page.Path	Target designation from	Connection point	Conductor	Target designation to	Connection point	/ Page.Path	Function text
sensor nut breakage	=MAS+S/15.8	+S1-X8	2	**BN**	+B-B3	BN	=MAS+S/15.8	
=	=MAS+S/15.9	+S1-X8	1	**BU**	+B-B3	BU	=MAS+S/15.8	

Cable name	Cable type	No. of conductor	Cross-section	Cable length	Part number
W3.SA	**LiYY**	**2**	**0,34 mm²**	**1,9 m**	**53 1082** 1238420

Function text	/ Page.Path	Target designation from	Connection point	Conductor	Target designation to	Connection point	/ Page.Path	Function text
+A-B3 Nut breakage monitoring	=MAS+S/15.3	+S-A1.0-X8	-X8:2	**BN**	+A-B3	BN	=MAS+S/15.3	
=	=MAS+S/15.4	+S-A1.0-X8	-X8:1	**BU**	+A-B3	BU	=MAS+S/15.3	

Cable name	Cable type	No. of conductor	Cross-section	Cable length	Part number
W20.SS1	**LIYY**	**6**	**0,34 mm²**	**11 m**	1400874

Function text	/ Page.Path	Target designation from	Connection point	Conductor	Target designation to	Connection point	/ Page.Path	Function text
sensor on bottom	=MAS+S/15.5	+S1-X6	2	**BN**	+S-A1.0-X9	-X9:2	=MAS+S/15.5	+B-B2 Lift in home position
sensor on top	=MAS+S/15.7	+S1-X7	1	**GN**	+S-A1.0-X9	-X9:3	=MAS+S/15.7	+B-B1 Leveling monitoring
sensor nut breakage	=MAS+S/15.9	+S1-X8	1	**GY**	+S-A1.0-X9	-X9:5	=MAS+S/15.9	+B-B3 Nut breakage monitoring
=	=MAS+S/15.8	+S1-X8	2	**PK**	+S-A1.0-X9	-X9:6	=MAS+S/15.8	=
sensor on bottom	=MAS+S/15.6	+S1-X6	1	**WH**	+S-A1.0-X9	-X9:1	=MAS+S/15.6	+B-B2 Lift in home position
sensor on top	=MAS+S/15.7	+S1-X7	2	**YE**	+S-A1.0-X9	-X9:4	=MAS+S/15.7	+B-B1 Leveling monitoring

Cable name	Cable type	No. of conductor	Cross-section	Cable length	Part number
W100.S1B	**YSLY-JZ**	**4**	**1,5 mm²**	**2 m**	1400873

Function text	/ Page.Path	Target designation from	Connection point	Conductor	Target designation to	Connection point	/ Page.Path	Function text
Motor Post +B	=MAS+S/14.6	+S1-X100	1	**1**	+B-M100	U1	=MAS+S/14.6	Motor Post +B
=	=MAS+S/14.6	+S1-X100	2	**2**	+B-M100	V1	=MAS+S/14.6	=
=	=MAS+S/14.7	+S1-X100	3	**3**	+B-M100	W1	=MAS+S/14.6	=
=	=MAS+S/14.7	+S1-X100	PE	**GNYE**	+B-M100	PE	=MAS+S/14.6	=

NORMBL_MAHA_SERIE_04

Cable diagram

KABEPL_MAHA_SERIE_05

Cable name	Cable type	No. of conductor	Cross-section	Cable length	Part number
W100.SA	**YSLY-JZ**	**4**	**1,5 mm²**	**2 m**	**53 1254** 1238518

Function text	/ Page.Path	Target designation from	Connection point	Conductor	Target designation to	Connection point	/ Page.Path	Function text
Motor Post +A	=MAS+S/14.3	+S-A1.0-X4	-X4:4	**GNYE**	+A-M100	PE	=MAS+S/14.2	Motor Post +A
=	=MAS+S/14.2	+S-A1.0-X4	-X4:1	**1**	+A-M100	U1	=MAS+S/14.2	=
=	=MAS+S/14.2	+S-A1.0-X4	-X4:2	**2**	+A-M100	V1	=MAS+S/14.2	=
=	=MAS+S/14.3	+S-A1.0-X4	-X4:3	**3**	+A-M100	W1	=MAS+S/14.2	=

Cable name	Cable type	No. of conductor	Cross-section	Cable length	Part number
W100.SS1	**YSLY-JZ**	**4**	**1,5 mm²**	**11 m**	1400873

Function text	/ Page.Path	Target designation from	Connection point	Conductor	Target designation to	Connection point	/ Page.Path	Function text
Motor Post +B	=MAS+S/14.6	+S1-X100	1	**1**	+S-A1.0-X3	-X3:1	=MAS+S/14.6	Motor Post +B
=	=MAS+S/14.6	+S1-X100	2	**2**	+S-A1.0-X3	-X3:2	=MAS+S/14.6	=
=	=MAS+S/14.7	+S1-X100	3	**3**	+S-A1.0-X3	-X3:3	=MAS+S/14.7	=
=	=MAS+S/14.7	+S1-X100	PE	**GNYE**	+S-A1.0-X3	-X3:4	=MAS+S/14.7	=

NORMBL_MAHA_SERIE_04

Parts list

ARTIST_MAHA_SERIE_04

RKZ Placement	Quantity ME	Description	Data	manufacturer Type designation	Part number
+DOKU-S200 =MAS+DOKU/9.7	1 piece	Push button Emergency stop	Ø 30mm	Rafi M22	1401137
+S-A1.0 =MAS+S/12.0	1	board Post-Lift MASTAR		Knestel-Electronic MAH HBP ST1	1400595 1400595
+S-F1 =MAS+S/16.8	1 piece	fuse holder	10A / 250V	BULGIN FX0380	53 0370 1238091
+S-F1 =MAS+S/16.8	1 piece	Miniature fuse	T 5,0 A	T 5,0 A	53 3150 1239490
+S-P3 =MAS+S/17.1	1 piece	Buzzer Enclosure mounting, Adjustable volume	24V AC/DC, Ø28,5mm	J. AUER Signalgeräte GmbH BU2	51 0279 1234469
+S-Q1 =MAS+S/10.1	1 piece	Main switch Emergency-Stop function	7,5kW, 25A	SONTHEIMER Elektroschaltgeräte GmbH N4/8ZM/Z20/PE	50 1095 1234219
+S-X12.1 =MAS+S/16.1	1 piece	SCHUKO Socket Enclosure mounting	250V, 16A	Mennekes Elektrotechnik GmbH & Co. KG 11012	1401133
+S-X12.2 =MAS+S/16.2	1 piece	SCHUKO Socket Enclosure mounting	250V, 16A	Mennekes Elektrotechnik GmbH & Co. KG 11012	1401133
+S-XD1 =MAS+S/10.1	1 Piece	input lead Main switch with input lead		Baude Kabeltechnick	1400871
+D-B74 =MAS+S/16.8	1 piece	Light barrier Change-over contact	12-240V DC; 24-240V AC	Sick AG WL 250-2R1531	51 3093 1234973
+B-B1 =MAS+S/15.7	1 piece	Proximity switch induktiv	M12, 2mm / 1,9m	Wachendorff GmbH & Co. KG	1401242
+B-B2 =MAS+S/15.5	1 piece	Proximity switch induktiv	M12, 2mm / 1,9m	Wachendorff GmbH & Co. KG	1401242
+B-B3 =MAS+S/15.8	1 piece	Proximity switch induktiv	M12, 2mm / 1,9m	Wachendorff GmbH & Co. KG	1401242
+B-X14 =MAS+S/16.4	1 piece	SCHUKO-Stecker 2P + PE	16A, 250V, 2,5mm²	Bachmann Type 13	1401135
+A-B1 =MAS+S/15.2	1 piece	Proximity switch induktiv	M12, 2mm / 1,9m	Wachendorff GmbH & Co. KG	1401242
+A-B2 =MAS+S/15.0	1 piece	Proximity switch induktiv	M12, 2mm / 1,9m	Wachendorff GmbH & Co. KG	1401242
+A-B3 =MAS+S/15.3	1 piece	Proximity switch induktiv	M12, 2mm / 1,9m	Wachendorff GmbH & Co. KG	1401242
+A-X14 =MAS+S/16.1	1 piece	SCHUKO-Stecker 2P + PE	16A, 250V, 2,5mm²	Bachmann Type 13	1401135
+S1-A2.0 =MAS+S/13.1	1	board Additional operating panelMASTAR		Knestel-Electronic MAH HBP BF 1	1400603
+S1-X12.1 =MAS+S/16.4	1 piece	SCHUKO Socket Enclosure mounting	250V, 16A	Mennekes Elektrotechnik GmbH & Co. KG 11012	1401133
+S1-X12.2 =MAS+S/16.5	1 piece	SCHUKO Socket Enclosure mounting	250V, 16A	Mennekes Elektrotechnik GmbH & Co. KG 11012	1401133

MAHA Group GmbH
Hoyen 20
D 87490 Haldenwang (Allgäu)

Equipment designation: 2-Post Lift
Drawing number : 228.01.005823

- Additional operating panel
- Ceiling light barrier
- Buzzer with variable loudness Horn
- 3x 400V, N, PE, 50/60Hz C 16A + RCD(30mA)

Dieser Schaltplan wurde für den maximalen Ausbau der Maschine erstellt. Optionsbedingt können Abweichungen zwischen Steuerung und Schaltplan vorhanden sein.
This circuit diagram is intended for machines equipped with all options. Options appearing in the circuit diagram need not necessarily be present in the control unit.

Power supply : 3x 230V, PE, 50/60Hz
Fuse protection : C 25A + RCD(30mA)

Created on : 02.09.2019 by: BFU
Last modified : 30.11.2020 by: BFU

Serial Number

SN + Barcode

Table of contents

INHALT_MAHA_SERIE_01

NORMBL_MAHA_SERIE_04

Information to the electical diagram

- Explanation of the reference marking (RKZ) according to DIN EN 81346:
  Symbol " =" meant: Type of the plant
  Symbol " +" meant: Location of the construction unit
  Symbol " - " meant: Designation of the construction unit

  Example:

The valve is mounting un the

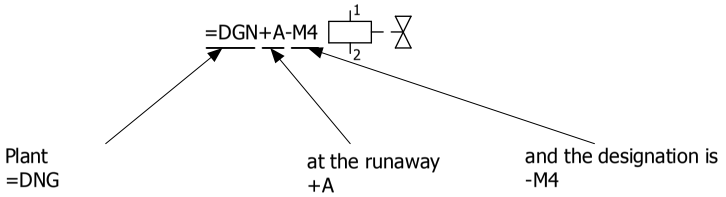

Since our plants and their controls can be assigned clearly, it is to be let be omitted permitted with the RKZ the plant designation. The RKZ will look as follows in our plants:

+A-M4

A construction unit on a electrical diagram page is drawn in, in whose header "+S" , must the place name is registered "+S" before the designation of the construction unit are set.

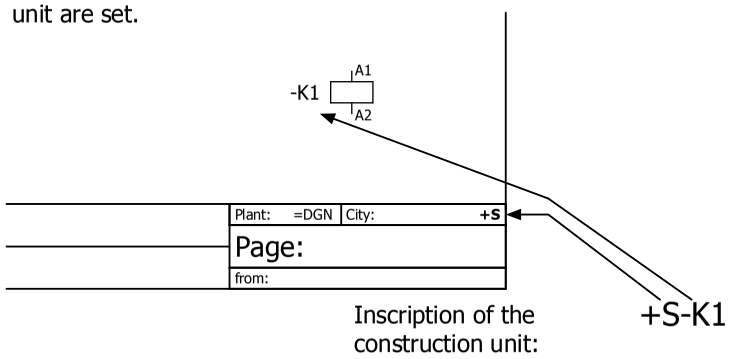

If a local box is drawn around a construction unit, then this has always priority, before the header

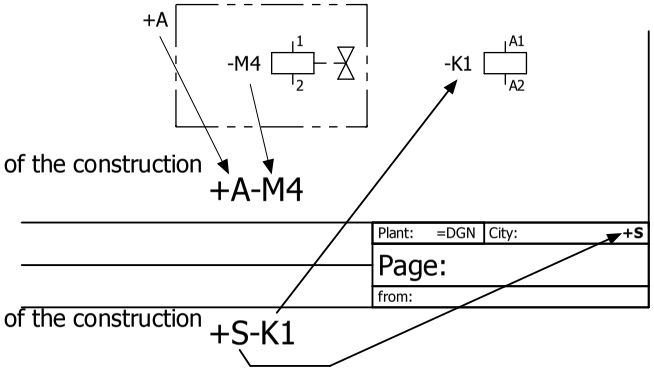

Another type of representation permits a doing without the local box.
The describing place must be set before the construction unit designation:

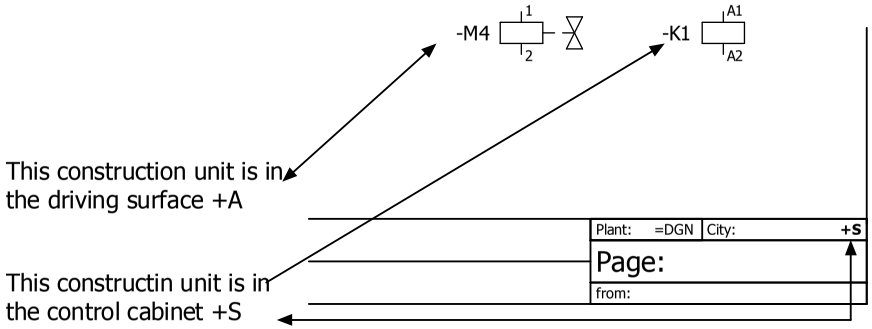

In this plant the following place names are relevant:
"+S" - Switchgear cabinet
"+A" - Driving surface / Post
"+B" - Driving surface / Post
"+C" - Hydraulic aggregate
"+D" - outside of the equipment
"+S1" - external control unit
"+S2" - foot control unit

Information to the electical diagram

Achtung!
Für alle Anlagenteile sind seperate Potentialausgleichsleiter in den Schaltschrank zu führen und dort zu erden.

Caution!
Route seperate potential equalization wires for all components into the control cabinet and attach them to the grounding terminals.

Der Inhalt dieses Schaltplans wurde sorgfältig auf Richtigkeit geprüft. Trotzdem können Fehler nicht vollständig ausgeschlossen werden. Technische Änderungen ohne Vorankündigung jederzeit vorbehalten.

The contents of this circuit diagram have been checked with great care. However, errors cannot be fully excluded. Subject to technical change without notice.

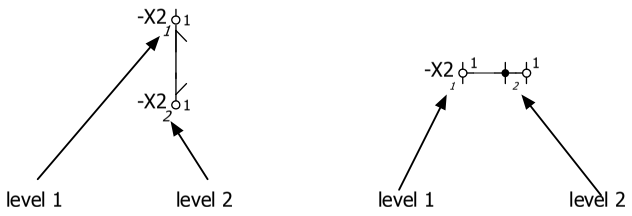

Legend of the color of conductor

BK = Schwarz / Black / Noir / Nero
BN = Braun / Brown / Maron / Marone
RD = Rot / Red / Rouge / Rosso
OG = Orange / Orange / Orange / Arancia
YE = Gelb / Yellow / Jaune / Giallo
GN = Grün / Green / Vert / Verde
BU = Blau / Blue / Bleu / Blu
VT = Violett / Violet / Violet / Viola
GY = Grau / Grey / Gris / Grigio
WH = Weiss / White / Blanc / Bianco
PK = Rosa / Pink / Rose / Rosa

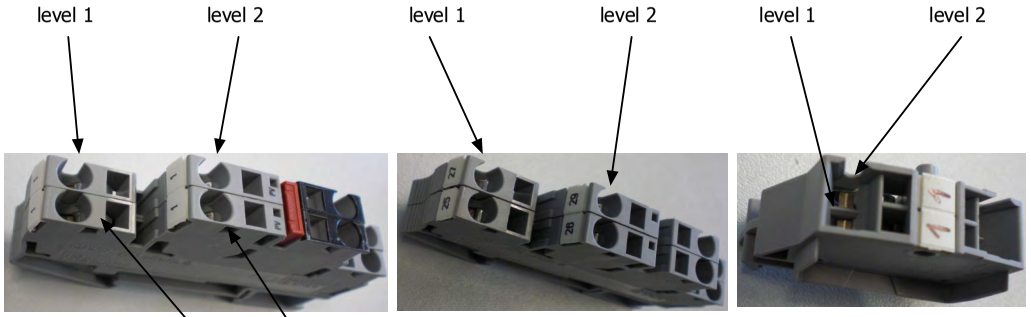

Pictograph and signal word

	Danger!	Danger of personal injury through dangerous electrical voltage. Reference to an imminent danger that may result in death or serious personal injury if the corresponding measures are not taken.
	Danger!	Danger of personal injury through a general source of danger. Reference to an imminent danger that may result in death or serious personal injury if the corresponding measures are not taken.
	Note!	Important note to ensure troublefree operation

Klemmleiste
+S-X2
Klemmleiste im Schaltschrank 24VDC

Kabelname	Kabeltyp	Zielbezeichnung	Anschluss	Klemme	Etage	Brücke	Zielbezeichnung	Anschluss	Kabeltyp	Kabelname
W:20.SC	YSLY-JZ 7x1,0 mm²								YSLY-JZ 10x0,75 mm²	W:30.SC2
W:32.2SC2	YSLY-JZ 7x1,0 mm²								YSLY-JZ 7x1,0 mm²	W:20.SC
W:70.SC2	YSLY-OZ 4x0,75 mm²								YSLY-OZ 4x0,75 mm²	W:70.SC
W:34.SC	YSLY-JZ 5x0,75 mm²								YSLY-OZ 4x0,75 mm²	W:70.SC1
W:30.SC1	YSLY-JZ 16x0,75 mm²									
		-A1.0-X8	-X9:2	1	1					
		+C1-X30	1	1	2		+C2-X30	1	1	
		+C-X34	1	1	1		+C-X20	1		1
		-A200	A1+	1	2					
		+C2-X70	1	1	1		+C-X70	1		1
				1	2		+C1-X70	1		1

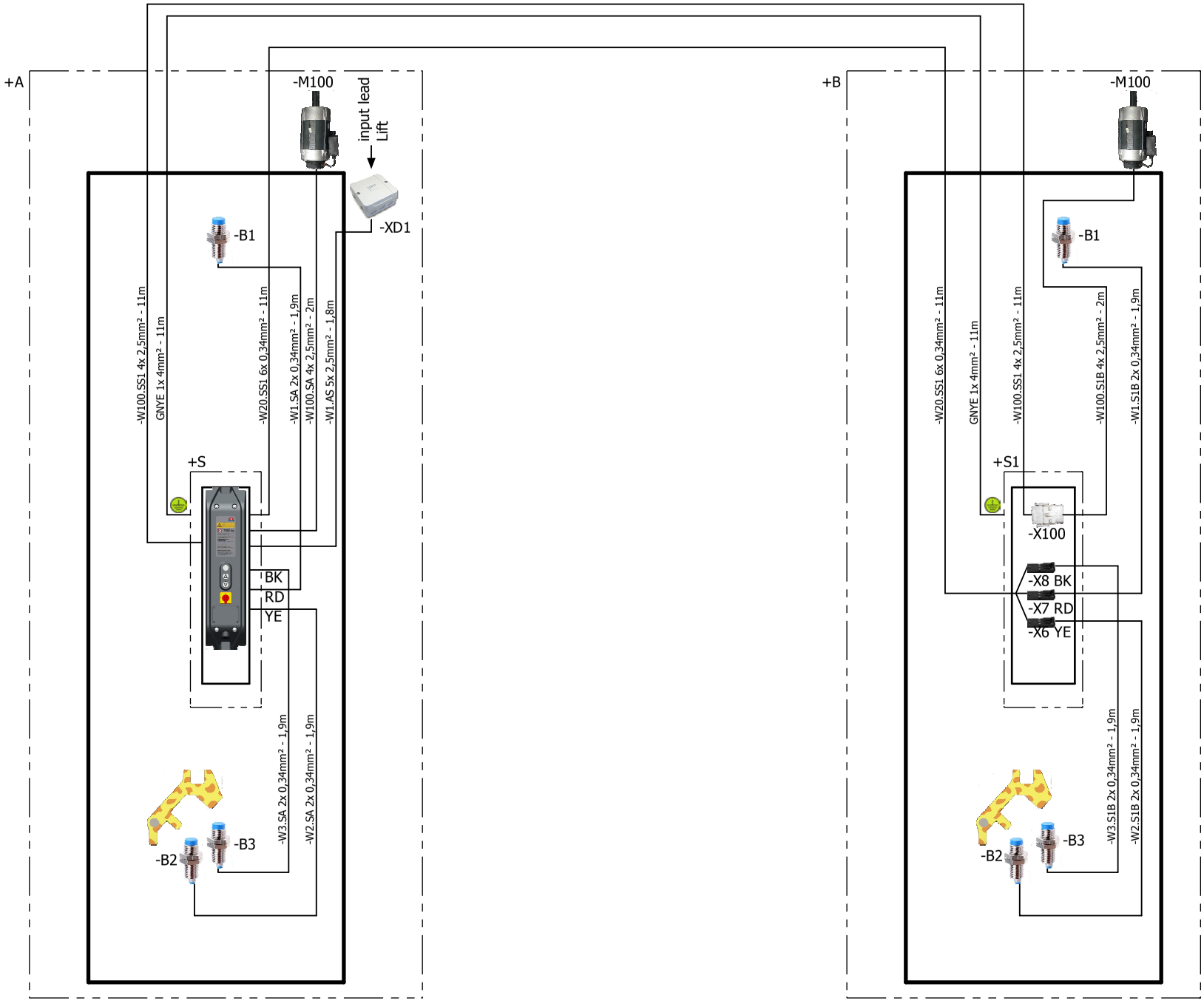

Operating side
Post +A

Opposite side
Post +B

Last modified	30.11.2020	2-Post Lift MA STAR 3.5	Equipment overview	228.01.005823	Plant: =MAS	
Last editor	BFU				Installation site:	Page: 5
					Location: +DOKU	From: 20

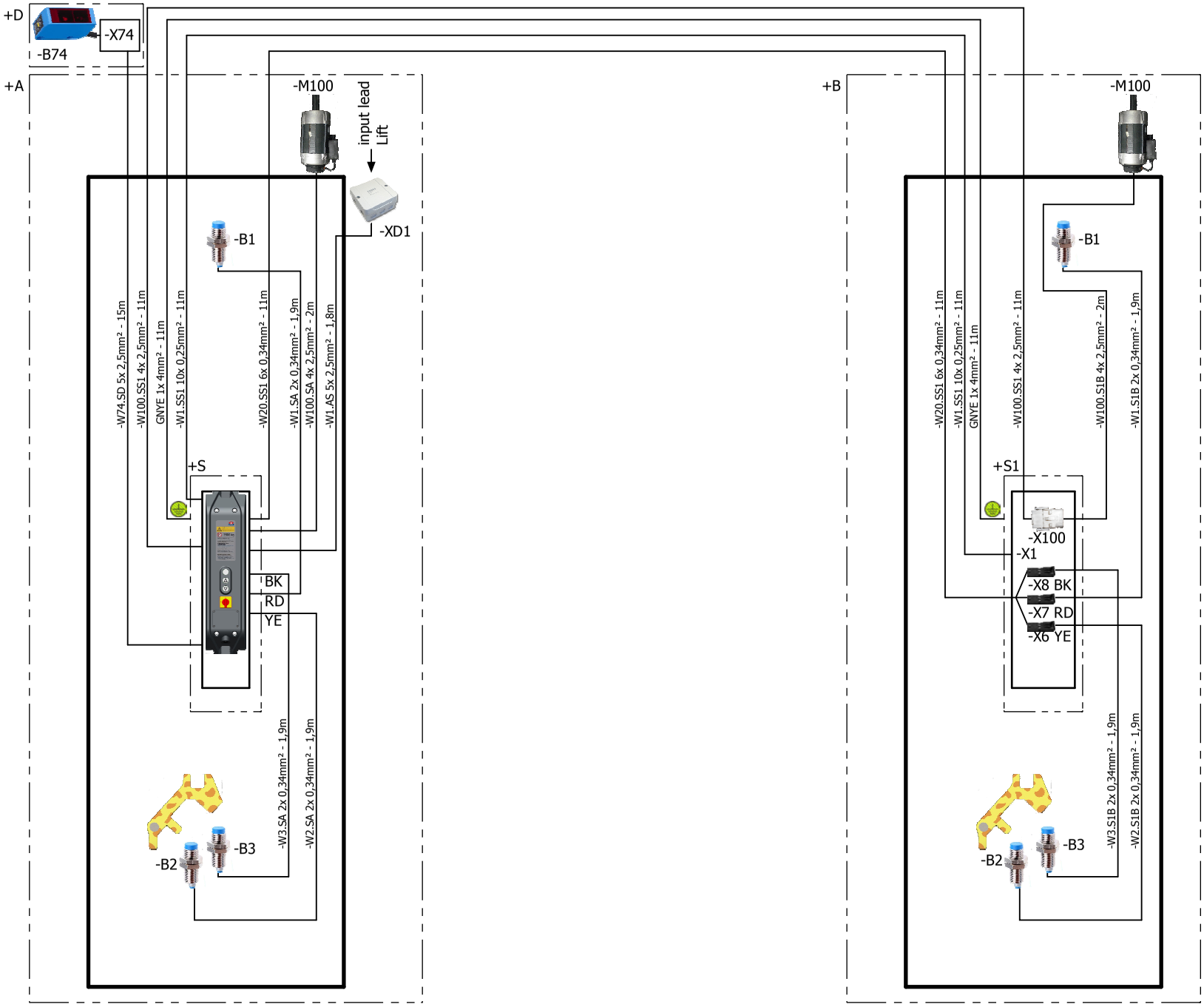

Last modified	30.11.2020	2-Post Lift MA STAR 3.5	Equipment overview Option Additional operating panel Option Power set Option Buzzer with variable loudness Horn	228.01.005823	Plant: =MAS Installation site: Location: +DOKU
Last editor	BFU				Page: 6 From: 20

NORMBL_MAHA_SERIE_05

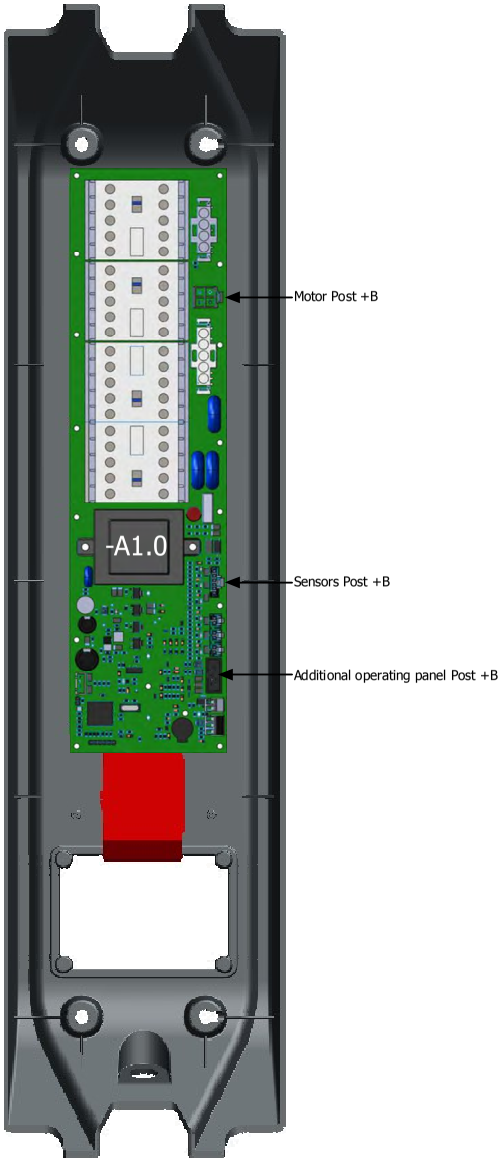

Last modified	30.11.2020	2-Post Lift MA STAR 3.5	Operation panel Post +A	228.01.005823	Plant: =MAS	
Last editor	BFU				Installation site:	Page: 7
					Location: +DOKU	From: 20

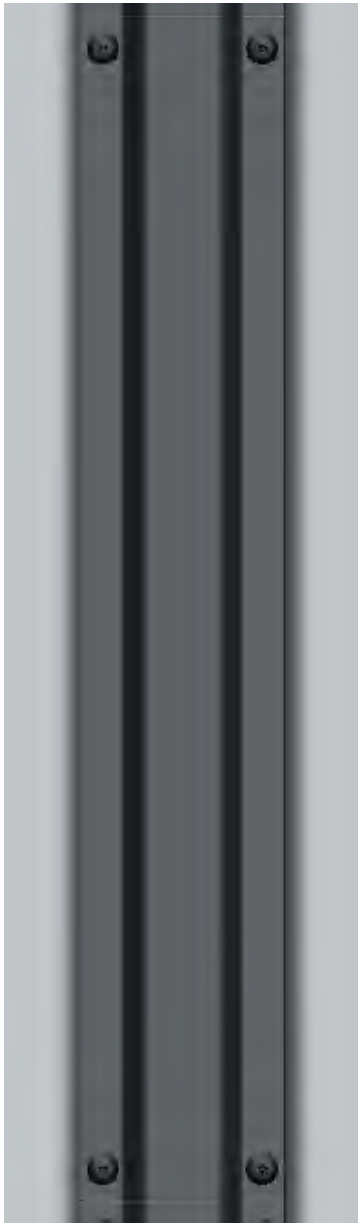

OPTION: Additional operating panel

7

+S/9

Last modified	30.11.2020	2-Post Lift MA STAR 3.5	Cabinet Post +B OPTION: Additional operating panel	228.01.005823	Plant: =MAS	
Last editor	BFU				Installation site:	Page: 8
					Location: +DOKU	From: 20

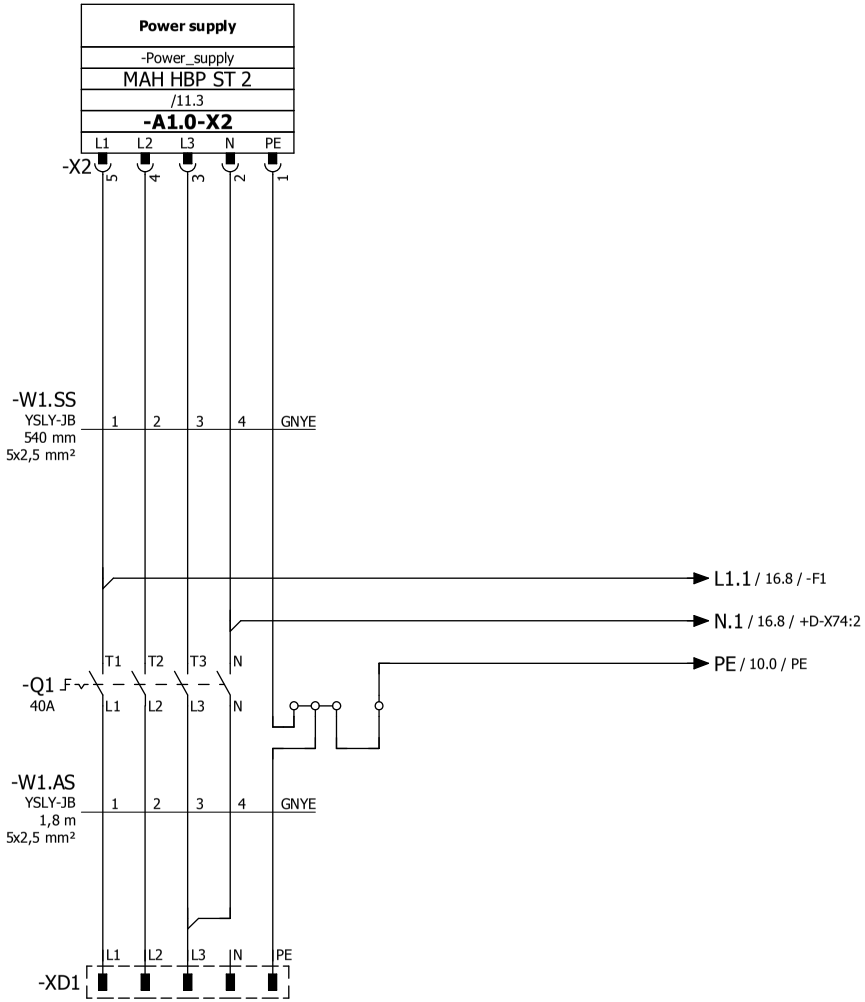

Power supply

ATTENTION !

Voltage also present when master switch is turned off

Voltage: **3x230V, PE, 50/60Hz**

Fuse protection by the building contractor: **C 25A + RCD(30mA)**

Option: 3x 400V, N, PE, 50/60Hz

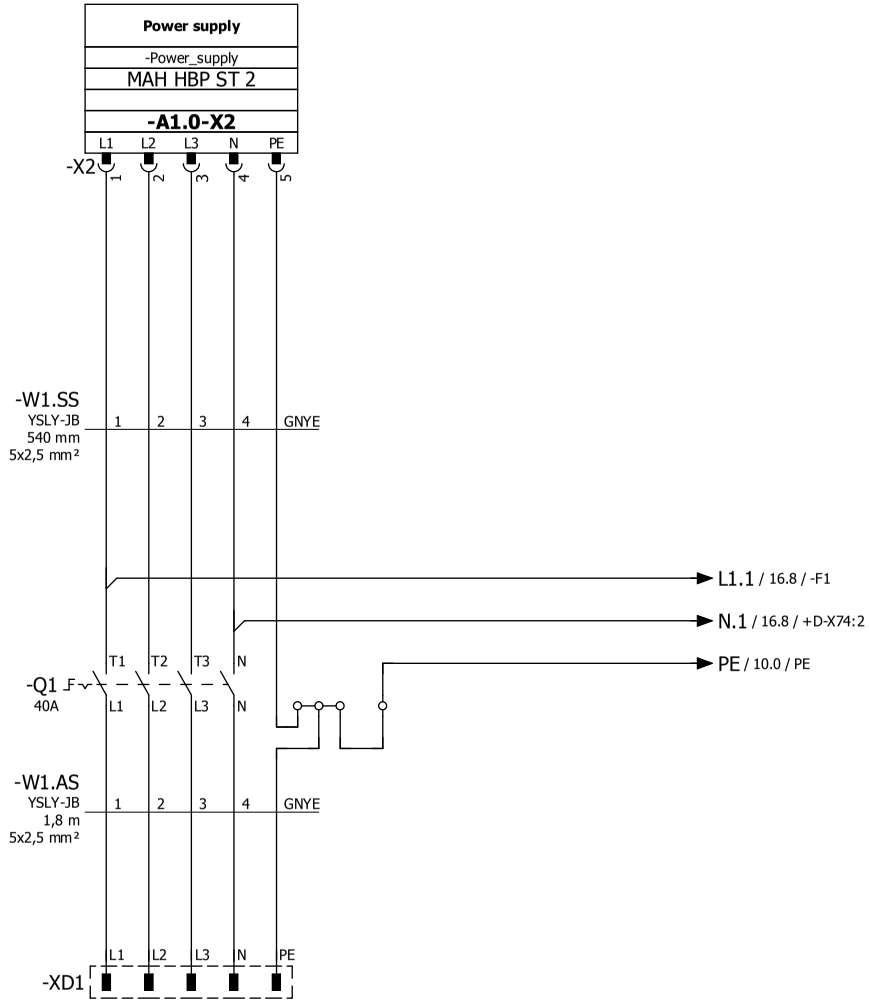

Power supply

ATTENTION !

Voltage also present when master switch is turned off

Voltage: **3x400V, N, PE, 50/60Hz**

Fuse protection by the building contractor: **C 16A + RCD(30mA)**

NORMBL_MAHA_SERIE_05

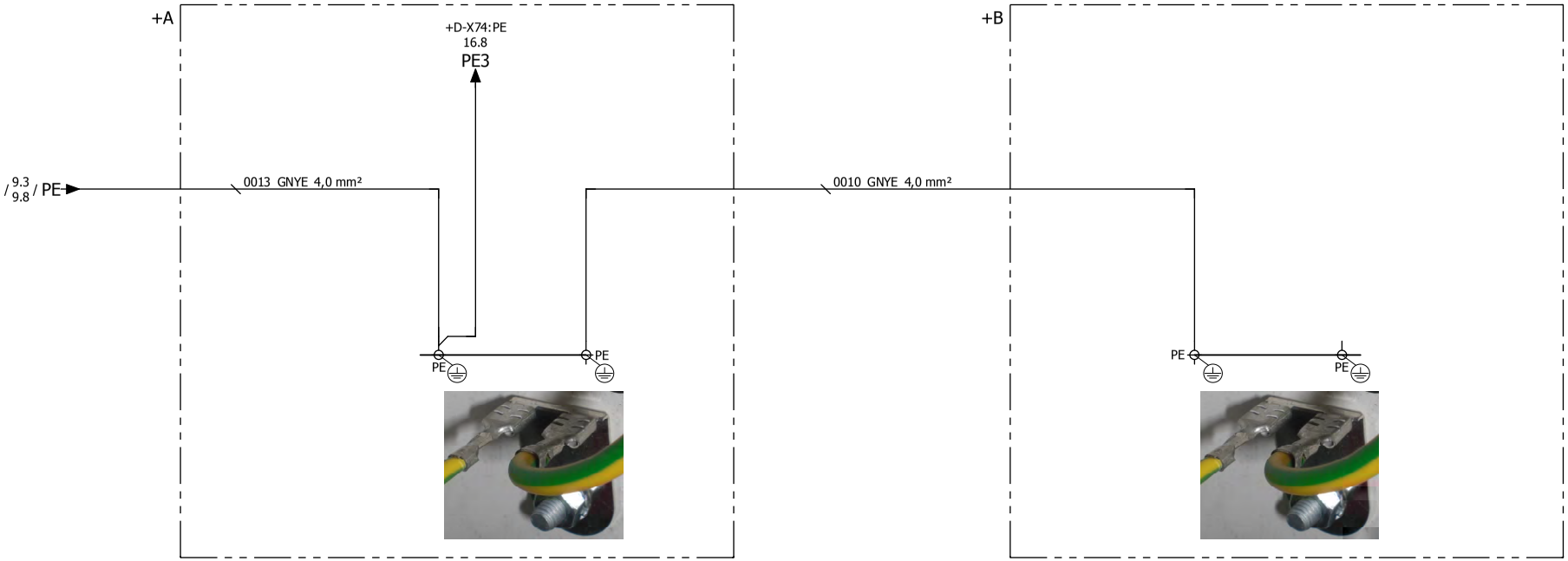

Grounding
Post

Grounding
Post

Last modified	30.11.2020	2-Post Lift MA STAR 3.5	Grounding	228.01.005823	Plant: =MAS	
Last editor	BFU				Installation site:	Page: 10
					Location: +S	From: 20

-A1.0

board MAH HBP ST2

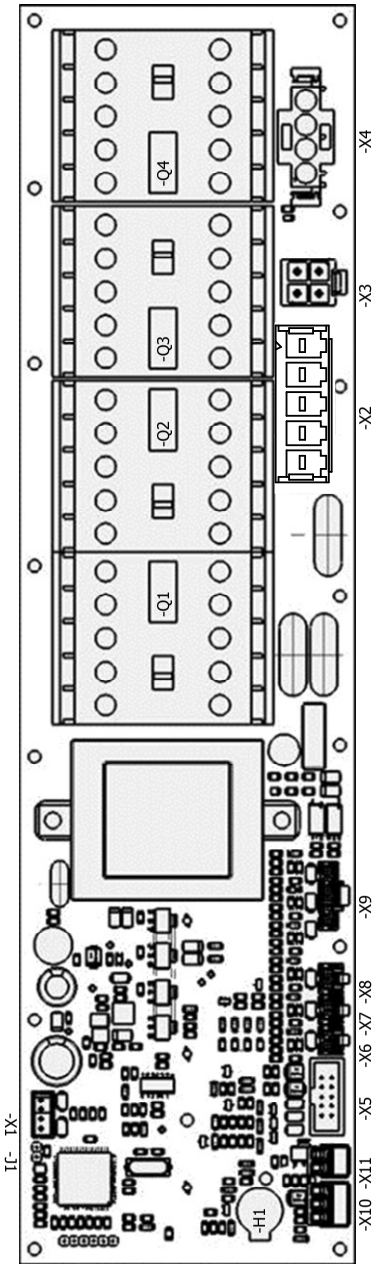

OUTPUT

X4:	-Motor1_PE	4	/13.1	Motor Post +A
	-Motor1_L1	3	/13.1	Motor Post +A
	-Motor1_L3	2	/13.1	Motor Post +A
	-Motor1_L2	1	/13.1	Motor Post +A
X3:	-Motor2_PE	4	/13.7	Motor Post +B
	-Motor2_L2	3	/13.7	Motor Post +B
	-Motor2_L1	2	/13.7	Motor Post +B
	-Motor2_L3	1	/13.6	Motor Post +B

INPUT

X2:	-Power_supply_PE	1	/9.2	Power supply
	-Power_supply_N	2	/9.1	Power supply
	-Power_supply_L3	3	/9.1	Power supply
	-Power_supply_L2	4	/9.1	Power supply
	-Power_supply_L1	5	/9.1	Power supply

X9:	-signal_nut_breakage2	6	/15.8	+B-B3 Nut breakage monitoring
	+8V_nut_breakage2	5	/15.9	+B-B3 Nut breakage monitoring
	-signal_pulse_generator2	4	/15.7	+B-B1 Leveling monitoring
	+8V_pulse_generator2	3	/15.7	+B-B1 Leveling monitoring
	-signal_limit_switch2	2	/15.5	+B-B2 Lift in home position
	+8V_limit_switch2	1	/15.6	+B-B2 Lift in home position
X8:	-signal_nut_breakage1	2	/15.3	+A-B3 Nut breakage monitoring
	+8V_nut_breakage1	1	/15.4	+A-B3 Nut breakage monitoring
X7:	-signal_pulse_generator1	2	/15.2	+A-B1 Leveling monitoring
	+8V_pulse_generator1	1	/15.2	+A-B1 Leveling monitoring
X6:	-signal_limit_switch1	2	/15.0	+A-B2 Lift in home position
	+8V_limit_switch1	1	/15.1	+A-B2 Lift in home position
X5:	-emergency_stop_OUT1	1		
	-emergency_stop_IN1	2		
	-emergency_stop_OUT2	3		
	-emergency_stop_IN2	4		
	-button_up_external	5		
	-button_down_external	6		
	-LED_red	7		
	-LED_blue_middle	8		
	-LED_blue_lower	9		
	-GND_opposite_side	10		
X11:	-signal_buzzer	2		
	+24VDC_buzzer	1		
X10:	-signal_light_barrier	3	/16.9	+D-W74 Light barrier
		2		
	+24VDC_light_barrier	1	/16.8	+D-W74 Light barrier
X1:	-GND_RS232	4		
	-TxD_RS232	3		
	-RxD_RS232	2		
	+5V_RS232	1		

Jumper removed

Option:
zusätzliche Bedieneinheit
Säule +B

10x0,25 mm²

-A1.0-X5:1	BK	BK
-A1.0-X5:2	VT	VT
-A1.0-X5:3	BU	BU
-A1.0-X5:4	RD	RD
-A1.0-X5:5	GY	GY
-A1.0-X5:6	PK	PK
-A1.0-X5:7	GN	GN
-A1.0-X5:8	YE	YE
-A1.0-X5:9	WH	WH
-A1.0-X5:10	BN	BN

→ -W1.SS1 / 12.4 / +S1-A2.0-X1:-X1:10

Last modified	30.11.2020	2-Post Lift MA STAR 3.5	Overview Control board MAH HBP ST 2	228.01.005823	Plant: =MAS
Last editor	BFU				Installation site:
					Location: +S

Page: 11
From: 20

Option: Additional operating panel Post +B

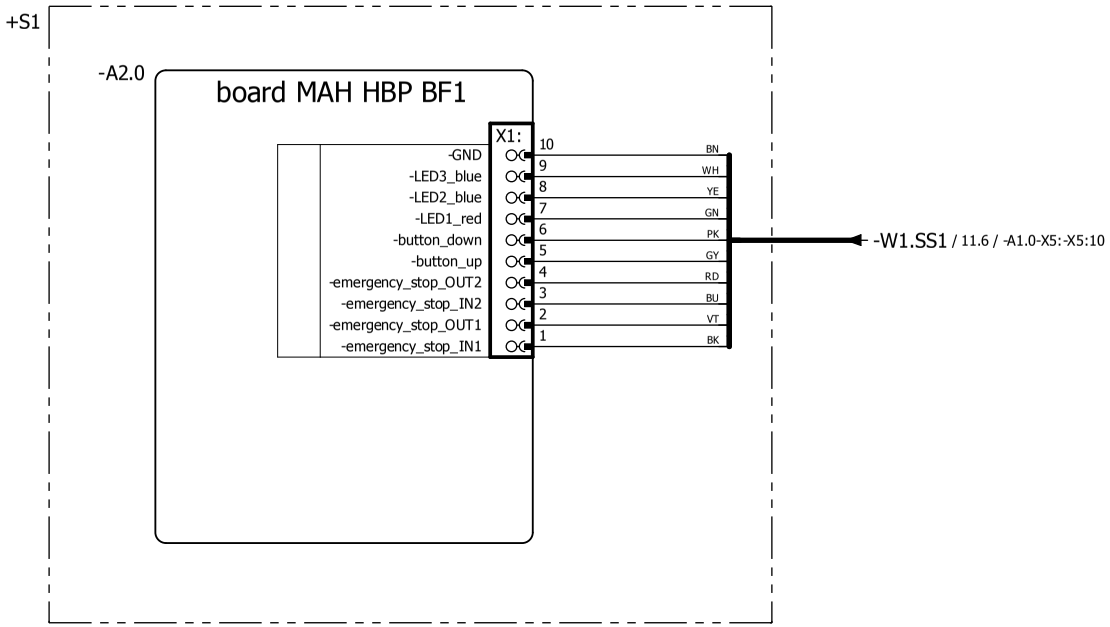

Last modified	30.11.2020	2-Post Lift MA STAR 3.5	Option: Overview Additional operating panel MAH HBF BF 1	228.01.005823	Plant: =MAS	
Last editor	BFU				Installation site:	Page: 12
					Location: +S	From: 20

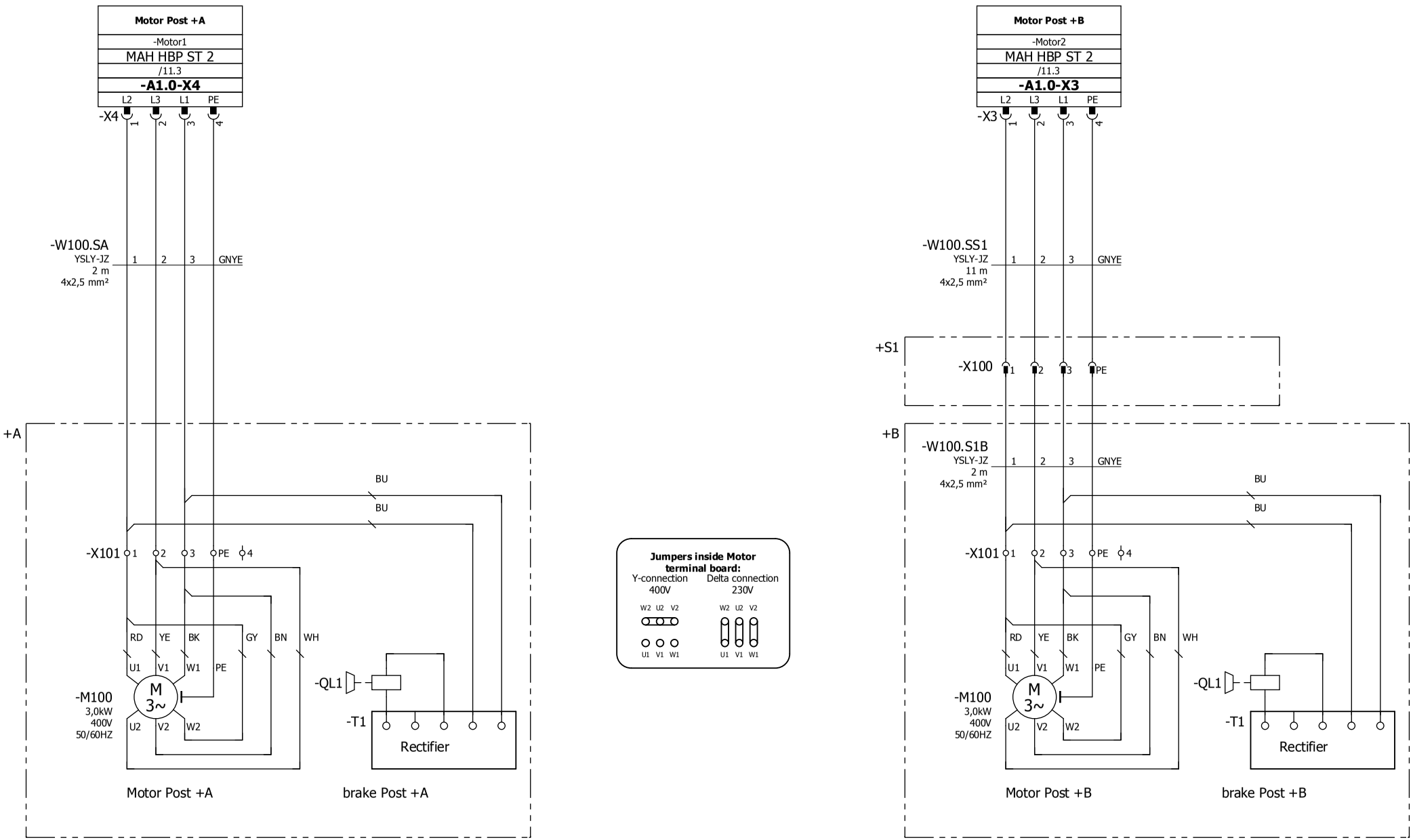

12 14

Last modified	30.11.2020	2-Post Lift MA STAR 3.5	basic functions	228.01.005823	Plant: =MAS	
Last editor	BFU				Installation site:	Page: 13
					Location: +S	From: 20

NORMBL_MAHA_SERIE_05

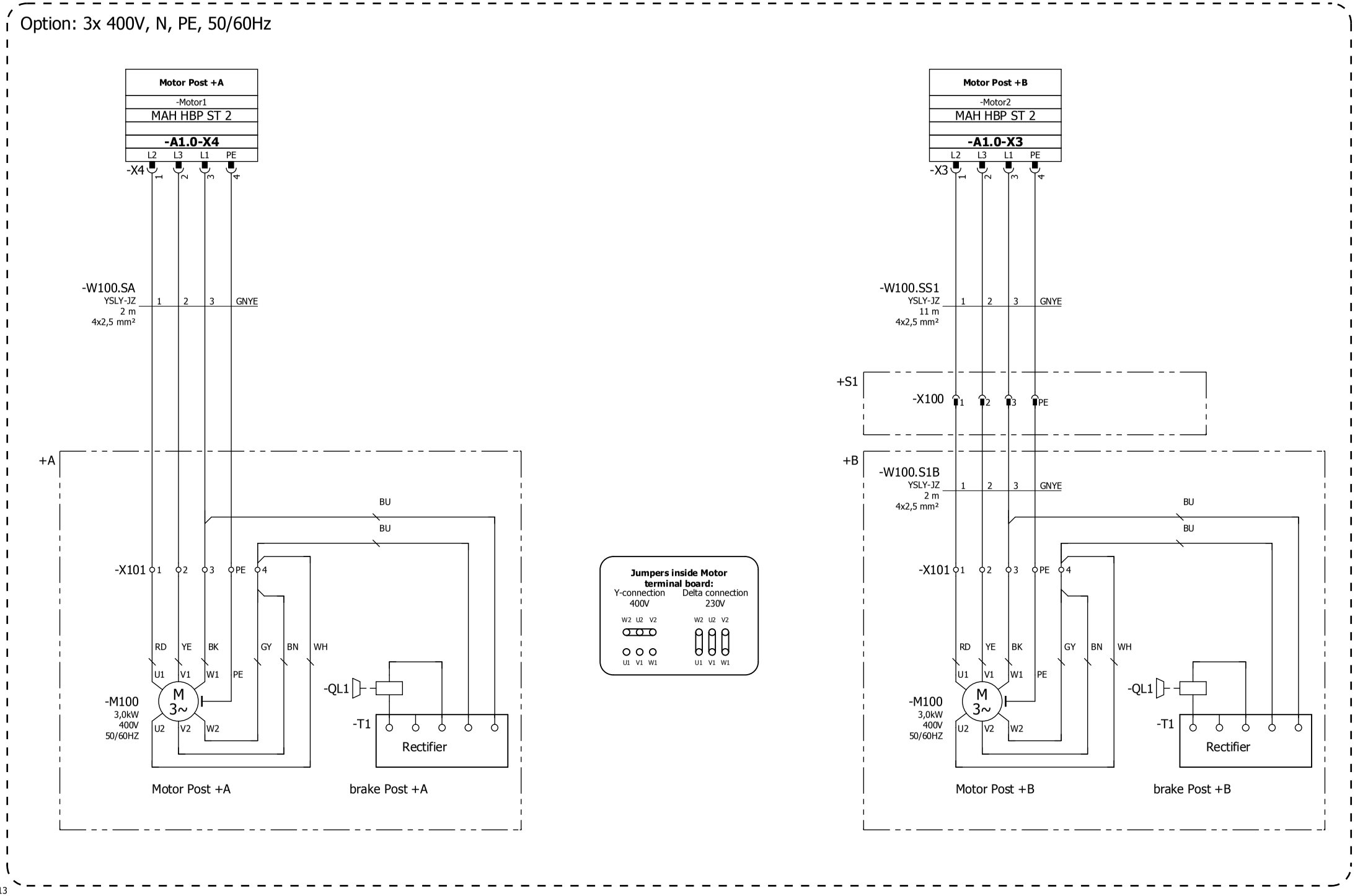

13 15

Last modified	30.11.2020	2-Post Lift MA STAR 3.5	basic functions Option: 3x 400V	228.01.005823	Plant: =MAS	
Last editor	BFU				Installation site:	Page: 14
					Location: +S	From: 20

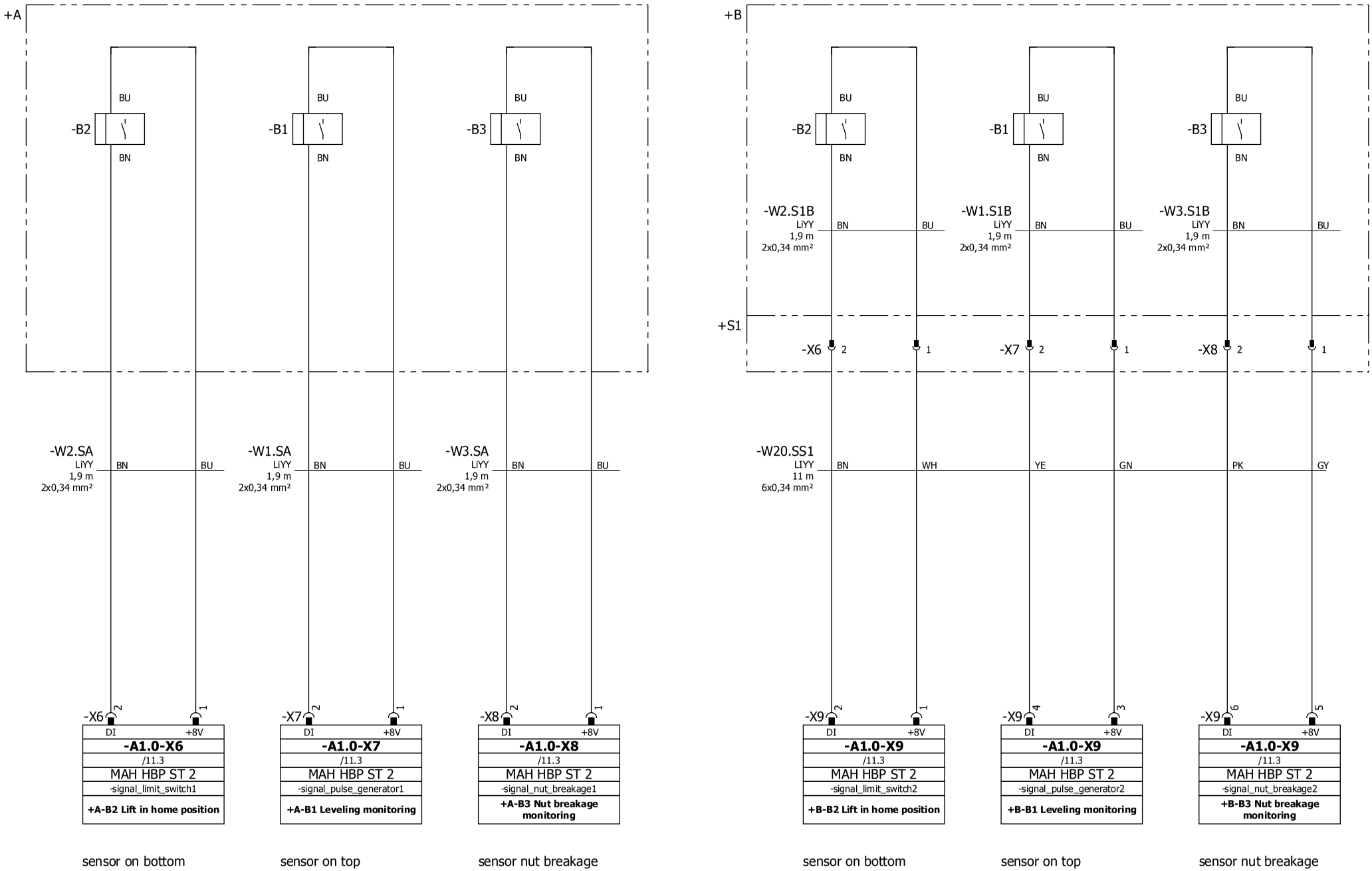

sensor on bottom | sensor on top | sensor nut breakage | sensor on bottom | sensor on top | sensor nut breakage

Last modified	30.11.2020	2-Post Lift MA STAR 3.5	basic functions	228.01.005823	Plant: =MAS	
Last editor	BFU				Installation site:	Page: 15
					Location: +S	From: 20

NORMBL_MAHA_SERIE_05

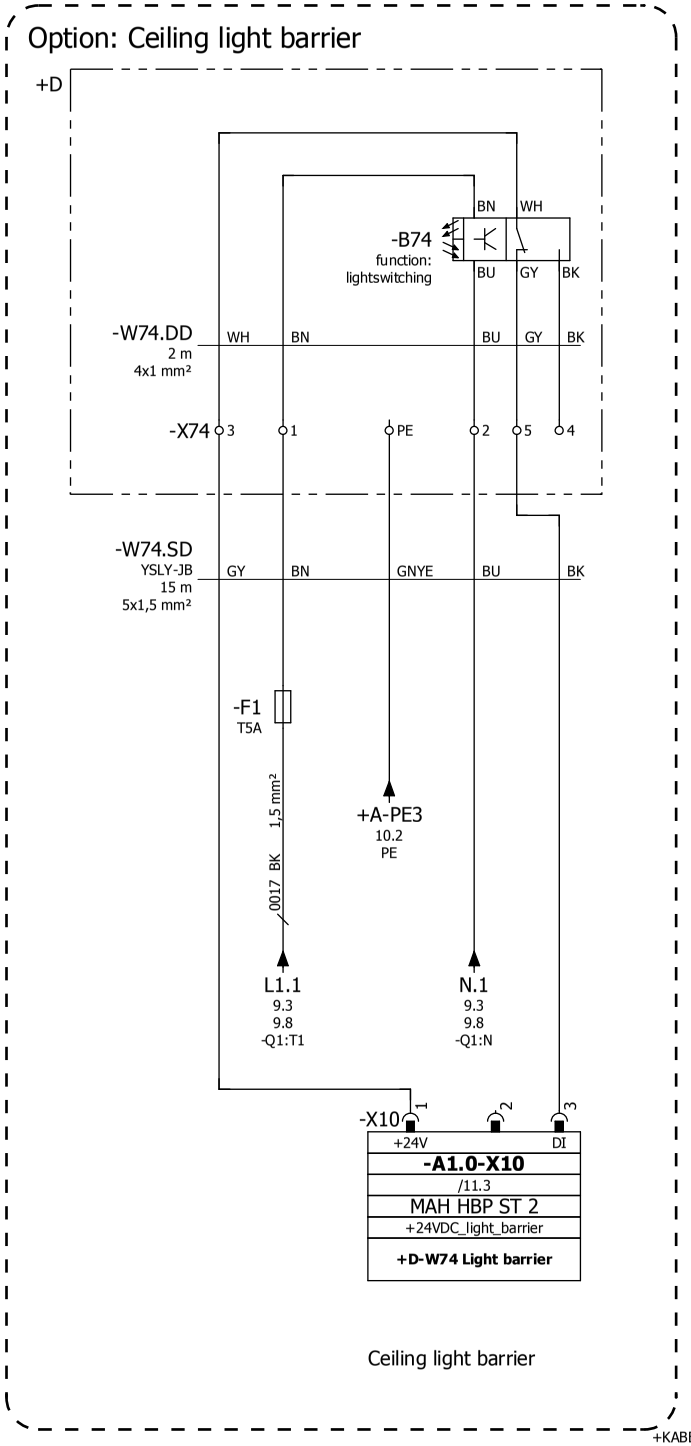

NORMBL_MAHA_SERIE_05

15

+KABEL/17

Last modified	30.11.2020	2-Post Lift MA STAR 3.5	Option: Ceiling light barrier	228.01.005823	Plant: =MAS	
Last editor	BFU				Installation site:	Page: 16
					Location: +S	From: 20

Cable diagram

KABEPL_MAHA_SERIE_05

Cable name	Cable type	No. of conductor	Cross-section	Cable length	Part number
W1.AS	**YSLY-JB**	**5**	**2,5 mm²**	**1,8 m**	

Function text	/ Page.Path	Target designation from	Connection point	Conductor	Target designation to	Connection point	/ Page.Path	Function text
Power supply	=MAS+S/9.1	+S-Q1	L1	**1**	+S-XD1	L1	=MAS+S/9.1	Power supply
=	=MAS+S/9.1	+S-Q1	L2	**2**	+S-XD1	L2	=MAS+S/9.1	=
=	=MAS+S/9.1	+S-Q1	L3	**3**	+S-XD1	L3	=MAS+S/9.1	=
=	=MAS+S/9.1	+S-Q1	N	**4**	+S-XD1	L3	=MAS+S/9.1	=
=	=MAS+S/9.2			**GNYE**	+S-XD1	PE	=MAS+S/9.1	=

Cable name	Cable type	No. of conductor	Cross-section	Cable length	Part number
W1.S1B	**LiYY**	**2**	**0,34 mm²**	**1,9 m**	

Function text	/ Page.Path	Target designation from	Connection point	Conductor	Target designation to	Connection point	/ Page.Path	Function text
sensor on top	=MAS+S/15.7	+S1-X7	2	**BN**	+B-B1	BN	=MAS+S/15.7	
=	=MAS+S/15.7	+S1-X7	1	**BU**	+B-B1	BU	=MAS+S/15.7	

Cable name	Cable type	No. of conductor	Cross-section	Cable length	Part number
W1.SA	**LiYY**	**2**	**0,34 mm²**	**1,9 m**	

Function text	/ Page.Path	Target designation from	Connection point	Conductor	Target designation to	Connection point	/ Page.Path	Function text
+A-B1 Leveling monitoring	=MAS+S/15.2	+S-A1.0-X7	-X7:2	**BN**	+A-B1	BN	=MAS+S/15.2	
=	=MAS+S/15.2	+S-A1.0-X7	-X7:1	**BU**	+A-B1	BU	=MAS+S/15.2	

Cable name	Cable type	No. of conductor	Cross-section	Cable length	Part number
W1.SS	**YSLY-JB**	**5**	**2,5 mm²**	**0,54 m**	1402691

Function text	/ Page.Path	Target designation from	Connection point	Conductor	Target designation to	Connection point	/ Page.Path	Function text
Power supply	=MAS+S/9.1	+S-A1.0-X2	-X2:5	**1**	+S-Q1	T1	=MAS+S/9.1	Power supply
=	=MAS+S/9.1	+S-A1.0-X2	-X2:4	**2**	+S-Q1	T2	=MAS+S/9.1	=
=	=MAS+S/9.1	+S-A1.0-X2	-X2:3	**3**	+S-Q1	T3	=MAS+S/9.1	=
=	=MAS+S/9.1	+S-A1.0-X2	-X2:2	**4**	+S-Q1	N	=MAS+S/9.1	=
=	=MAS+S/9.2	+S-A1.0-X2	-X2:1	**GNYE**			=MAS+S/9.2	=

Cable name	Cable type	No. of conductor	Cross-section	Cable length	Part number
W1.SS1		**10**	**0,25 mm²**		1400656

Function text	/ Page.Path	Target designation from	Connection point	Conductor	Target designation to	Connection point	/ Page.Path	Function text
	=MAS+S/11.5	+S-A1.0-X5	-X5:1	**BK**	+S1-A2.0-X1	-X1:1	=MAS+S/12.2	
	=MAS+S/11.5	+S-A1.0-X5	-X5:10	**BN**	+S1-A2.0-X1	-X1:10	=MAS+S/12.2	
	=MAS+S/11.5	+S-A1.0-X5	-X5:3	**BU**	+S1-A2.0-X1	-X1:3	=MAS+S/12.2	
	=MAS+S/11.5	+S-A1.0-X5	-X5:7	**GN**	+S1-A2.0-X1	-X1:7	=MAS+S/12.2	
	=MAS+S/11.5	+S-A1.0-X5	-X5:5	**GY**	+S1-A2.0-X1	-X1:5	=MAS+S/12.2	
	=MAS+S/11.5	+S-A1.0-X5	-X5:6	**PK**	+S1-A2.0-X1	-X1:6	=MAS+S/12.2	
	=MAS+S/11.5	+S-A1.0-X5	-X5:4	**RD**	+S1-A2.0-X1	-X1:4	=MAS+S/12.2	
	=MAS+S/11.5	+S-A1.0-X5	-X5:2	**VT**	+S1-A2.0-X1	-X1:2	=MAS+S/12.2	
	=MAS+S/11.5	+S-A1.0-X5	-X5:9	**WH**	+S1-A2.0-X1	-X1:9	=MAS+S/12.2	
	=MAS+S/11.5	+S-A1.0-X5	-X5:8	**YE**	+S1-A2.0-X1	-X1:8	=MAS+S/12.2	

NORMBL_MAHA_SERIE_04

Cable diagram

KABEPL_MAHA_SERIE_05

Cable name	Cable type	No. of conductor	Cross-section	Cable length	Part number
W2.S1B	**LiYY**	**2**	**0,34 mm²**	**1,9 m**	

Function text	/ Page.Path	Target designation from	Connection point	Conductor	Target designation to	Connection point	/ Page.Path	Function text
sensor on bottom	=MAS+S/15.5	+S1-X6	2	**BN**	+B-B2	BN	=MAS+S/15.5	
=	=MAS+S/15.6	+S1-X6	1	**BU**	+B-B2	BU	=MAS+S/15.5	

Cable name	Cable type	No. of conductor	Cross-section	Cable length	Part number
W2.SA	**LiYY**	**2**	**0,34 mm²**	**1,9 m**	

Function text	/ Page.Path	Target designation from	Connection point	Conductor	Target designation to	Connection point	/ Page.Path	Function text
+A-B2 Lift in home position	=MAS+S/15.0	+S-A1.0-X6	-X6:2	**BN**	+A-B2	BN	=MAS+S/15.0	
=	=MAS+S/15.1	+S-A1.0-X6	-X6:1	**BU**	+A-B2	BU	=MAS+S/15.0	

Cable name	Cable type	No. of conductor	Cross-section	Cable length	Part number
W3.S1B	**LiYY**	**2**	**0,34 mm²**	**1,9 m**	

Function text	/ Page.Path	Target designation from	Connection point	Conductor	Target designation to	Connection point	/ Page.Path	Function text
sensor nut breakage	=MAS+S/15.8	+S1-X8	2	**BN**	+B-B3	BN	=MAS+S/15.8	
=	=MAS+S/15.9	+S1-X8	1	**BU**	+B-B3	BU	=MAS+S/15.8	

Cable name	Cable type	No. of conductor	Cross-section	Cable length	Part number
W3.SA	**LiYY**	**2**	**0,34 mm²**	**1,9 m**	

Function text	/ Page.Path	Target designation from	Connection point	Conductor	Target designation to	Connection point	/ Page.Path	Function text
+A-B3 Nut breakage monitoring	=MAS+S/15.3	+S-A1.0-X8	-X8:2	**BN**	+A-B3	BN	=MAS+S/15.3	
=	=MAS+S/15.4	+S-A1.0-X8	-X8:1	**BU**	+A-B3	BU	=MAS+S/15.3	

Cable name	Cable type	No. of conductor	Cross-section	Cable length	Part number
W20.SS1	**LIYY**	**6**	**0,34 mm²**	**11 m**	1400874

Function text	/ Page.Path	Target designation from	Connection point	Conductor	Target designation to	Connection point	/ Page.Path	Function text
sensor on bottom	=MAS+S/15.5	+S1-X6	2	**BN**	+S-A1.0-X9	-X9:2	=MAS+S/15.5	+B-B2 Lift in home position
sensor on top	=MAS+S/15.7	+S1-X7	1	**GN**	+S-A1.0-X9	-X9:3	=MAS+S/15.7	+B-B1 Leveling monitoring
sensor nut breakage	=MAS+S/15.9	+S1-X8	1	**GY**	+S-A1.0-X9	-X9:5	=MAS+S/15.9	+B-B3 Nut breakage monitoring
=	=MAS+S/15.8	+S1-X8	2	**PK**	+S-A1.0-X9	-X9:6	=MAS+S/15.8	=
sensor on bottom	=MAS+S/15.6	+S1-X6	1	**WH**	+S-A1.0-X9	-X9:1	=MAS+S/15.6	+B-B2 Lift in home position
sensor on top	=MAS+S/15.7	+S1-X7	2	**YE**	+S-A1.0-X9	-X9:4	=MAS+S/15.7	+B-B1 Leveling monitoring

Cable name	Cable type	No. of conductor	Cross-section	Cable length	Part number
W100.S1B	**YSLY-JZ**	**4**	**2,5 mm²**	**2 m**	

Function text	/ Page.Path	Target designation from	Connection point	Conductor	Target designation to	Connection point	/ Page.Path	Function text
Motor Post +B	=MAS+S/13.6	+B-X101	1	**1**	+S1-X100	1	=MAS+S/13.6	Motor Post +B
=	=MAS+S/13.7	+B-X101	2	**2**	+S1-X100	2	=MAS+S/13.7	=
=	=MAS+S/13.7	+B-X101	3	**3**	+S1-X100	3	=MAS+S/13.7	=
=	=MAS+S/13.7	+B-X101	PE	**GNYE**	+S1-X100	PE	=MAS+S/13.7	=

Cable diagram

KABEPL_MAHA_SERIE_05

Cable name	Cable type	No. of conductor	Cross-section	Cable length	Part number
W100.SA	**YSLY-JZ**	**4**	**2,5 mm²**	**2 m**	

Function text	/ Page.Path	Target designation from	Connection point	Conductor	Target designation to	Connection point	/ Page.Path	Function text
Motor Post +A	=MAS+S/13.1	+A-X101	1	**1**	+S-A1.0-X4	-X4:1	=MAS+S/13.1	Motor Post +A
=	=MAS+S/13.1	+A-X101	2	**2**	+S-A1.0-X4	-X4:2	=MAS+S/13.1	=
=	=MAS+S/13.1	+A-X101	3	**3**	+S-A1.0-X4	-X4:3	=MAS+S/13.1	=
=	=MAS+S/13.1	+A-X101	PE	**GNYE**	+S-A1.0-X4	-X4:4	=MAS+S/13.1	=

Cable name	Cable type	No. of conductor	Cross-section	Cable length	Part number
W100.SS1	**YSLY-JZ**	**4**	**2,5 mm²**	**11 m**	1404605

Function text	/ Page.Path	Target designation from	Connection point	Conductor	Target designation to	Connection point	/ Page.Path	Function text
Motor Post +B	=MAS+S/13.6	+S1-X100	1	**1**	+S-A1.0-X3	-X3:1	=MAS+S/13.6	Motor Post +B
=	=MAS+S/13.7	+S1-X100	2	**2**	+S-A1.0-X3	-X3:2	=MAS+S/13.7	=
=	=MAS+S/13.7	+S1-X100	3	**3**	+S-A1.0-X3	-X3:3	=MAS+S/13.7	=
=	=MAS+S/13.7	+S1-X100	PE	**GNYE**	+S-A1.0-X3	-X3:4	=MAS+S/13.7	=

NORMBL_MAHA_SERIE_04

Parts list

ARTIST_MAHA_SERIE_04

RKZ Placement	Quantity ME	Description	Data	manufacturer Type designation	Part number
+DOKU-S200 =MAS+DOKU/8.7	1 piece	Push button Emergency stop	Ø 30mm	Rafi M22	1401137
+S-A1.0 =MAS+S/11.0	1	board Post-Lift MASTAR		Knestel-Electronic MAH HBP ST2	1402508
+S-F1 =MAS+S/16.8	1 piece	fuse holder	10A / 250V	BULGIN FX0380	53 0370 1238091
+S-F1 =MAS+S/16.8	1 piece	Miniature fuse	T 5,0 A	T 5,0 A	53 3150 1239490
+D-B74 =MAS+S/16.8	1 Piece	Ceiling light barrier		Maschinenbau Haldenwang	1401395
+B-B1 =MAS+S/15.7	1 piece	Proximity switch induktiv	M12, 2mm / 1,9m	Wachendorff GmbH & Co. KG	1401242
+B-B2 =MAS+S/15.5	1 piece	Proximity switch induktiv	M12, 2mm / 1,9m	Wachendorff GmbH & Co. KG	1401242
+B-B3 =MAS+S/15.8	1 piece	Proximity switch induktiv	M12, 2mm / 1,9m	Wachendorff GmbH & Co. KG	1401242
+A-B1 =MAS+S/15.2	1 piece	Proximity switch induktiv	M12, 2mm / 1,9m	Wachendorff GmbH & Co. KG	1401242
+A-B2 =MAS+S/15.0	1 piece	Proximity switch induktiv	M12, 2mm / 1,9m	Wachendorff GmbH & Co. KG	1401242
+A-B3 =MAS+S/15.3	1 piece	Proximity switch induktiv	M12, 2mm / 1,9m	Wachendorff GmbH & Co. KG	1401242
+S1-A2.0 =MAS+S/12.1	1	board Additional operating panelMASTAR		Knestel-Electronic MAH HBP BF 1	1400603
W1.SS =MAS+S/9.1	1 Piece	input lead Main Switch and Connection Box		Maschinenbau Haldenwang	1402691
W1.SS1 =MAS+S/11.5	1 Piece	cable assembly Connecting Cable Additional operating panel Post +B	10x0,14mm² 11m	Baude Kabeltechnick	1400656
W20.SS1 =MAS+S/15.5	1 Piece	cable assembly sensor distributor slave column	6x0,34mm² 11m	Baude Kabeltechnick	1400874
W100.SS1 =MAS+S/13.6	1	cable assembly Motor Slave Column	4x2,5mm² 11m	Maschinenbau Haldenwang	1404605

NORMBL_MAHA_SERIE_04

MAHA Group GmbH
Hoyen 20
D 87490 Haldenwang (Allgäu)

Equipment designation: 2-Post Lift
Drawing number : 228.01.005813A

- Additional operating panel
- Ceiling light barrier
- Power set 230V 16A + RCD(30mA)
- Buzzer with variable loudness
- 3x 380-400V, N (220V), PE, 60Hz

Dieser Schaltplan wurde für den maximalen Ausbau der Maschine erstellt. Optionsbedingt können Abweichungen zwischen Steuerung und Schaltplan vorhanden sein.
This circuit diagram is intended for machines equipped with all options. Options appearing in the circuit diagram need not necessarily be present in the control unit.

Power supply : 3x 400V, N, PE, 50Hz
Fuse protection : C 32A + RCD(30mA)

Created on : 17.10.2019 by: BFU
Last modified : 15.02.2022 by: BFU

Serial Number

SN + Barcode

Table of contents

INHALT_MAHA_SERIE_01

NORMBL_MAHA_SERIE_04

Information to the electical diagram

- Explanation of the reference marking (RKZ) according to DIN EN 81346:
  Symbol " =" meant: Type of the plant
  Symbol " +" meant: Location of the construction unit
  Symbol " - " meant: Designation of the construction unit

  Example:

The valve is mounting un the

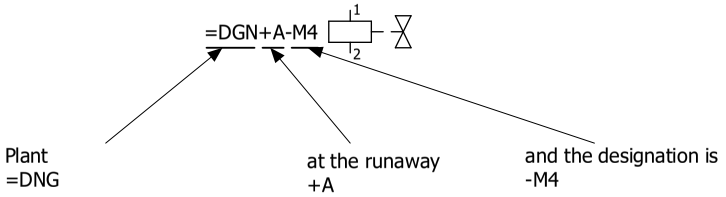

Since our plants and their controls can be assigned clearly, it is to be let be omitted permitted with the RKZ the plant designation. The RKZ will look as follows in our plants:

+A-M4

A construction unit on a electrical diagram page is drawn in, in whose header "+S" , must the place name is registered "+S" before the designation of the construction unit are set.

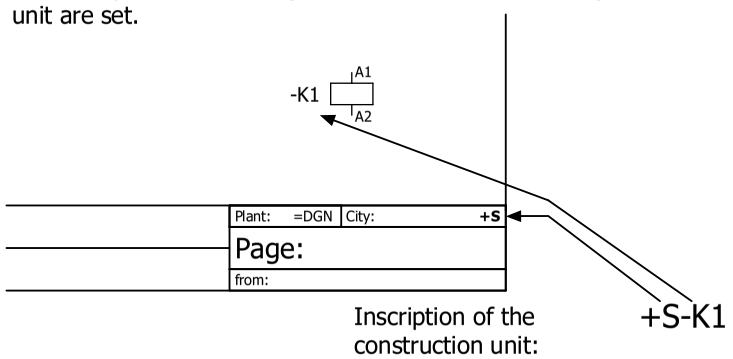

If a local box is drawn around a construction unit, then this has always priority, before the header

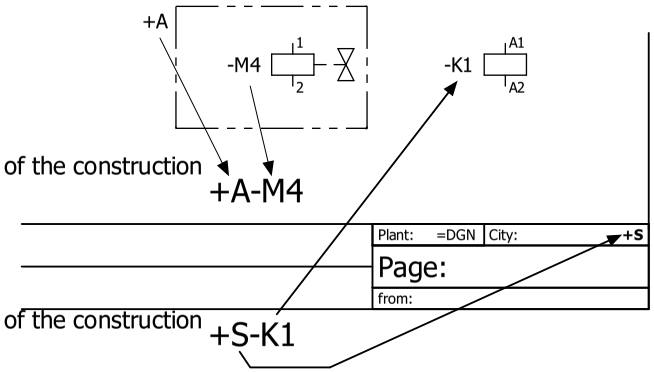

Another type of representation permits a doing without the local box.
The describing place must be set before the construction unit designation:

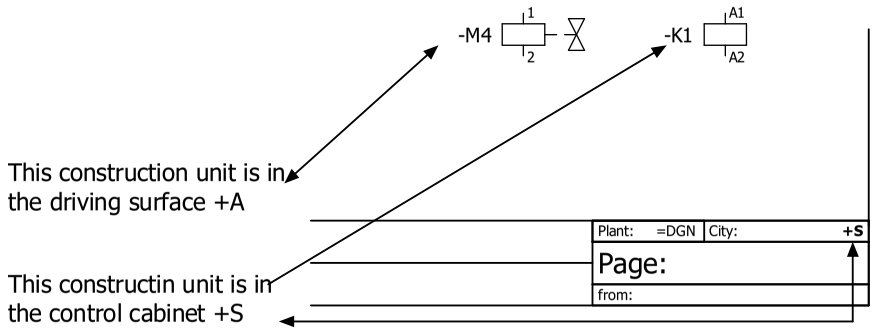

In this plant the following place names are relevant:
"+S" - Switchgear cabinet
"+A" - Driving surface / Post
"+B" - Driving surface / Post
"+C" - Hydraulic aggregate
"+D" - outside of the equipment
"+S1" - external control unit
"+S2" - foot control unit

Information to the electical diagram

Achtung!
Für alle Anlagenteile sind seperate Potentialausgleichsleiter in den Schaltschrank zu führen und dort zu erden.

Caution!
Route seperate potential equalization wires for all components into the control cabinet and attach them to the grounding terminals.

Der Inhalt dieses Schaltplans wurde sorgfältig auf Richtigkeit geprüft. Trotzdem können Fehler nicht vollständig ausgeschlossen werden. Technische Änderungen ohne Vorankündigung jederzeit vorbehalten.

The contents of this circuit diagram have been checked with great care. However, errors cannot be fully excluded. Subject to technical change without notice.

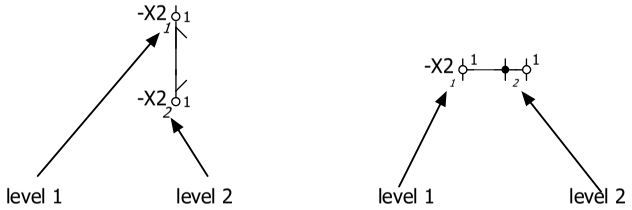

Legend of the color of conductor

BK = Schwarz / Black / Noir / Nero
BN = Braun / Brown / Maron / Marone
RD = Rot / Red / Rouge / Rosso
OG = Orange / Orange / Orange / Arancia
YE = Gelb / Yellow / Jaune / Giallo
GN = Grün / Green / Vert / Verde
BU = Blau / Blue / Bleu / Blu
VT = Violett / Violet / Violet / Viola
GY = Grau / Grey / Gris / Grigio
WH = Weiss / White / Blanc / Bianco
PK = Rosa / Pink / Rose / Rosa

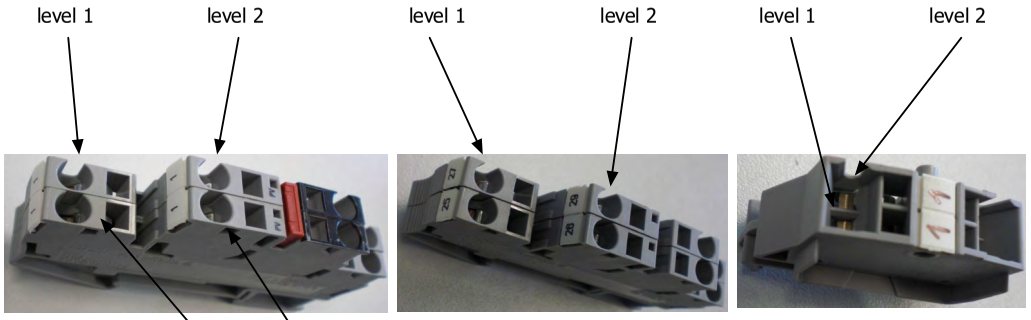

Klemmleiste
+S-X2
Klemmleiste im Schaltschrank 24VDC

Kabelname	Kabeltyp	Zielbezeichnung	Anschluss	Klemme	Etage	Brücke	Zielbezeichnung	Anschluss	Kabeltyp	Kabelname
W:20.SC	YSLY-JZ 7x1,0 mm²								YSLY-JZ 10x0,75 mm²	W:30.SC2
W:32.2SC2	YSLY-JZ 7x1,0 mm²								YSLY-JZ 7x1,0 mm²	W:20.SC
W:70.SC2	YSLY-OZ 4x0,75 mm²								YSLY-OZ 4x0,75 mm²	W:70.SC
W:34.SC	YSLY-JZ 5x0,75 mm²								YSLY-OZ 4x0,75 mm²	W:70.SC1
W:30.SC1	YSLY-JZ 16x0,75 mm²									
		-A1.0-X8	-X9:2	1	1					
		+C1-X30	1	1	2		+C2-X30	1	1	
		+C-X34	1	1	1		+C-X20	1		1
		-A200	A1+	1	2					
1		+C2-X70	1	1	1		+C-X70	1		1
				1	2		+C1-X70	1		1

Pictograph and signal word

	Danger!	Danger of personal injury through dangerous electrical voltage. Reference to an imminent danger that may result in death or serious personal injury if the corresponding measures are not taken.
	Danger!	Danger of personal injury through a general source of danger. Reference to an imminent danger that may result in death or serious personal injury if the corresponding measures are not taken.
	Note!	Important note to ensure troublefree operation

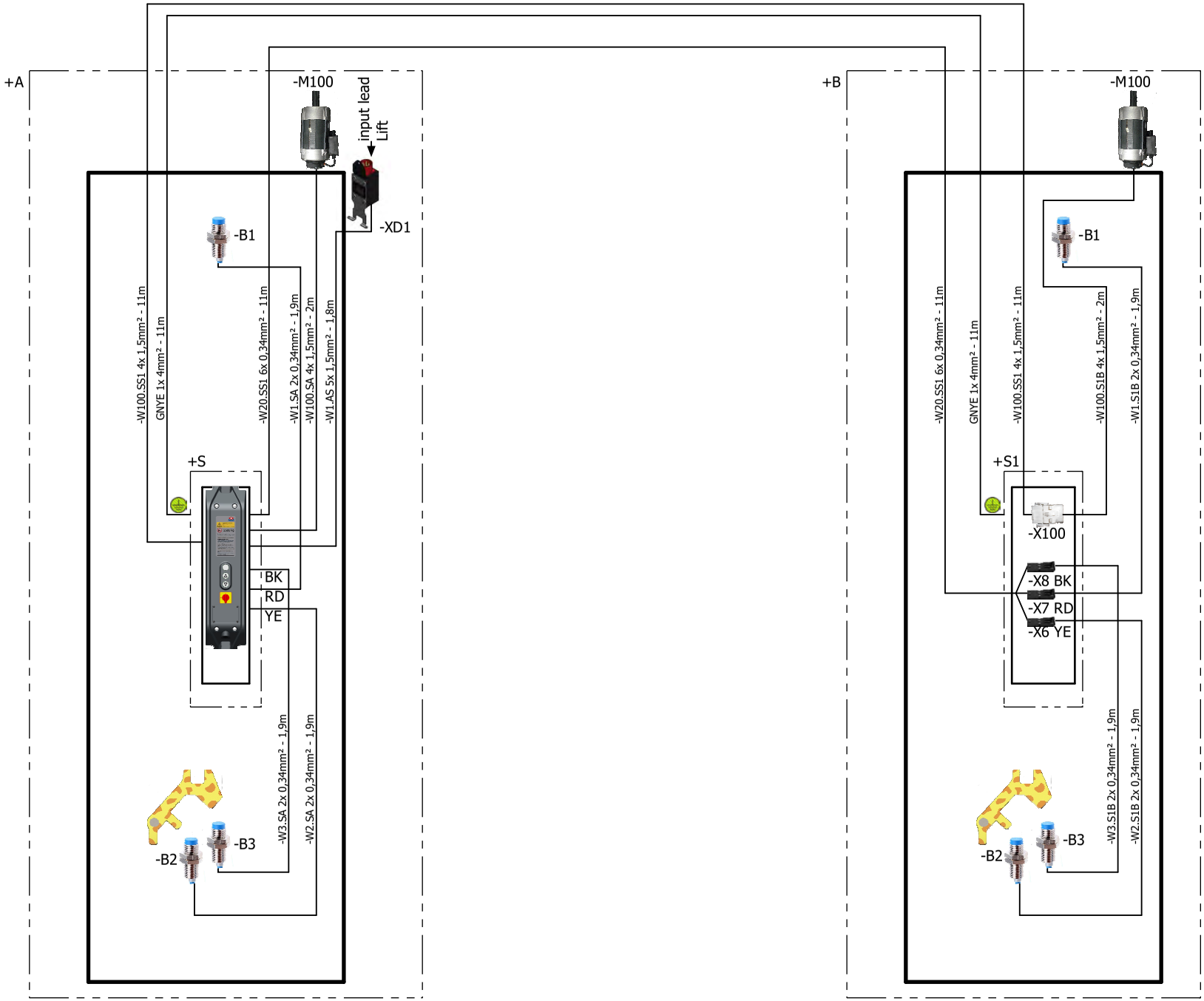

Operating side
Post +A

Opposite side
Post +B

Last modified	14.02.2022	2-Post Lift MA Star 5,5t / 6,5t	Equipment overview	228.01.005813A	Plant: / Location: +DOKU
Last editor	BFU				Page: 5 / From: 23

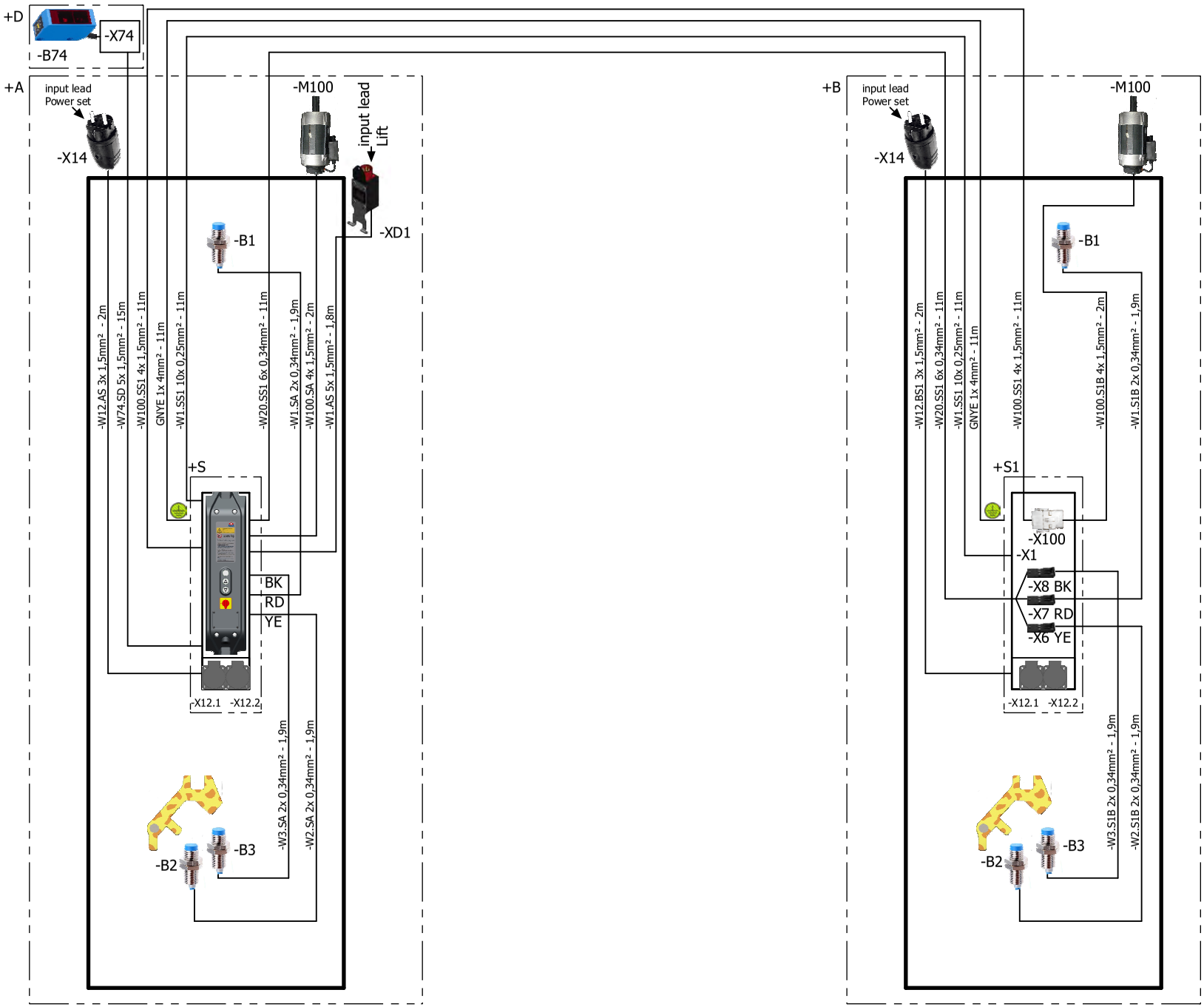

Last modified	14.02.2022	2-Post Lift MA Star 5,5t / 6,5t	Equipment overview Option Additional operating panel Option Power set	228.01.005813A	Plant: Location: **+DOKU**
Last editor	BFU				Page: 6
					From: 23

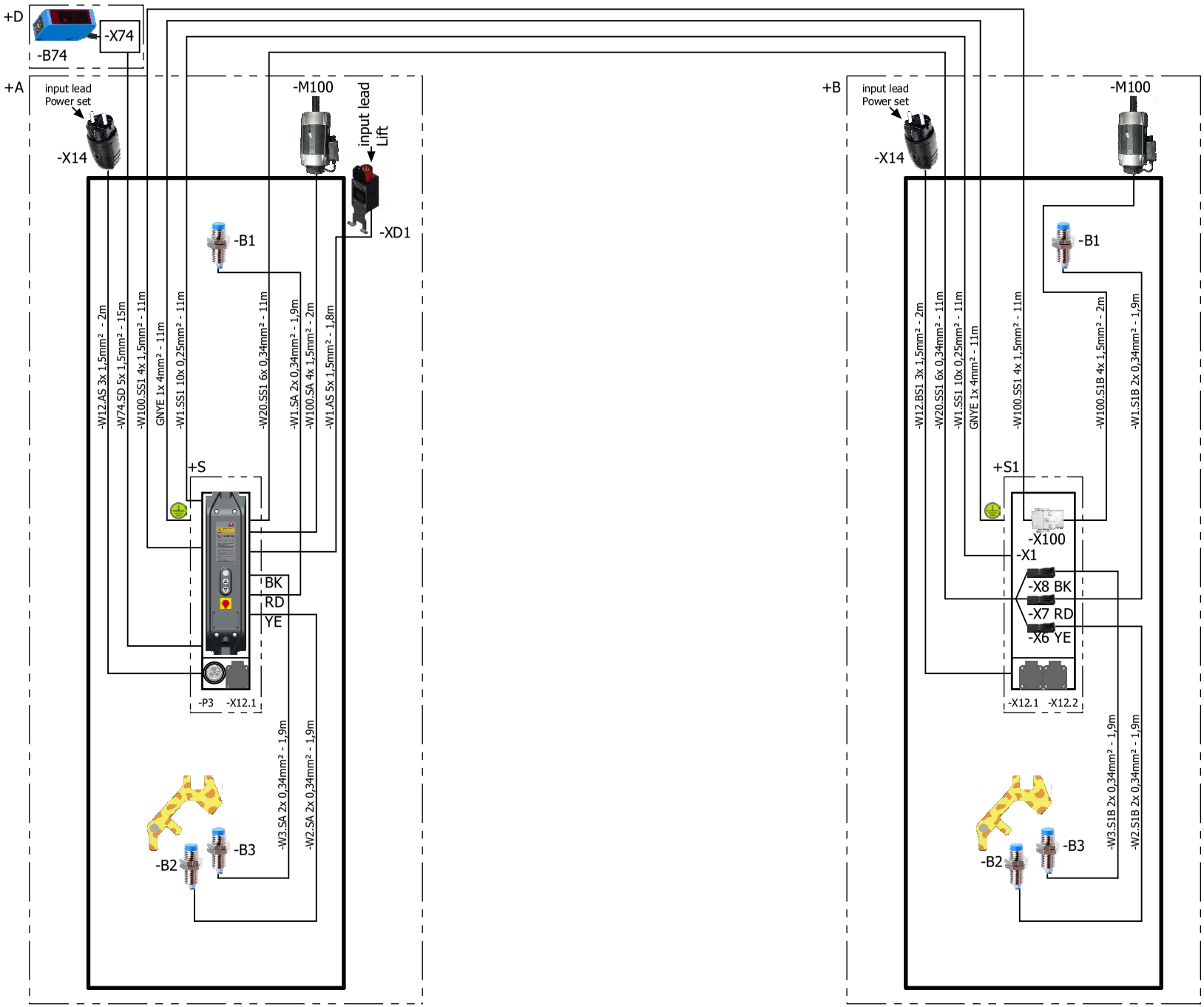

Operating side
Post +A

Opposite side
Post +B

Last modified	14.02.2022	2-Post Lift MA Star 5,5t / 6,5t	Equipment overview Option Additional operating panel Option Power set	228.01.005813A	Plant: Location: **+DOKU**
Last editor	BFU				Page: 7
					From: 23

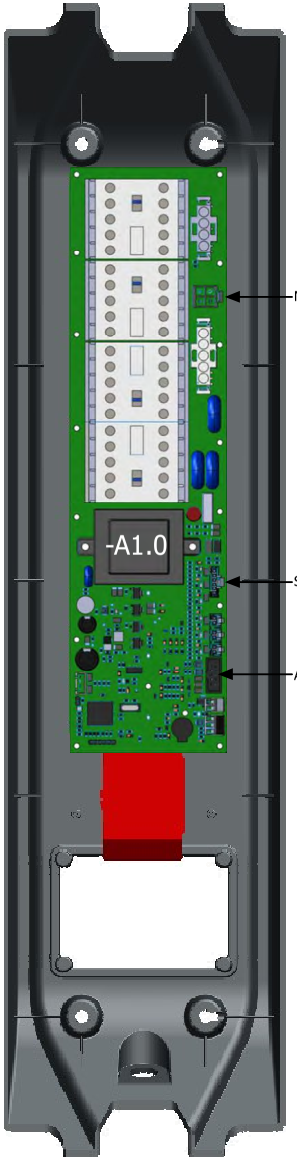
-A1.0
Motor Post +B
Sensors Post +B
Additional operating panel Post +B


MAHA
5500 kg
-P1
-S2
-S3
-Q1
1
0
-X12.1
-X12.2

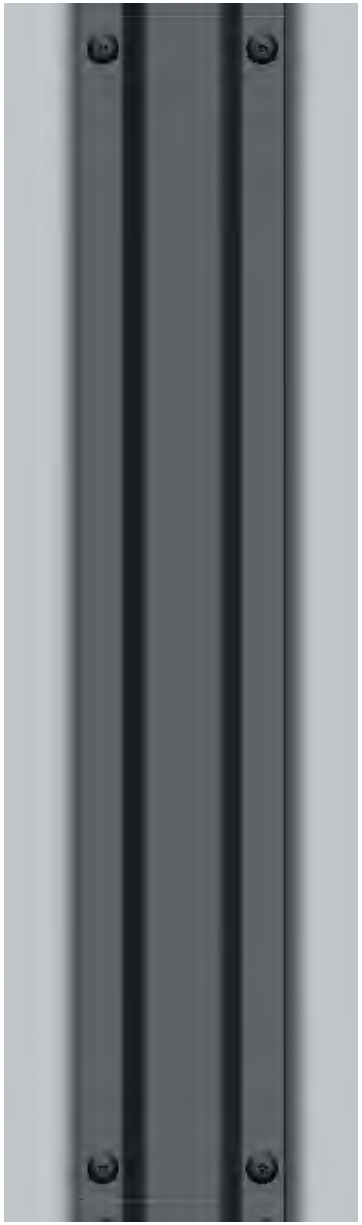

OPTION: Additional operating panel

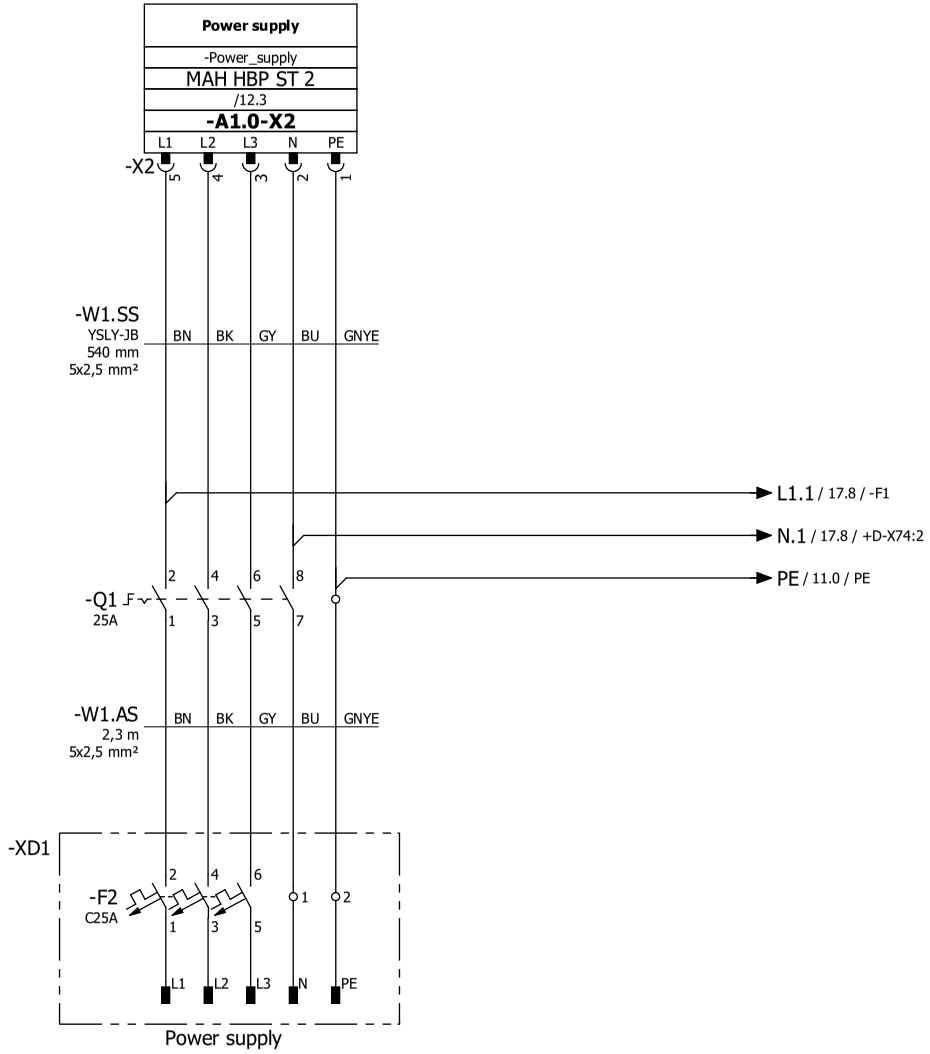

ATTENTION !

Voltage also present when master switch is turned off

Voltage: **3x400V, N, PE, 50Hz**
Option 3x380-400V, N(220V), PE, 60Hz

Fuse protection by the building contractor: **C 32A + RCD(30mA)**

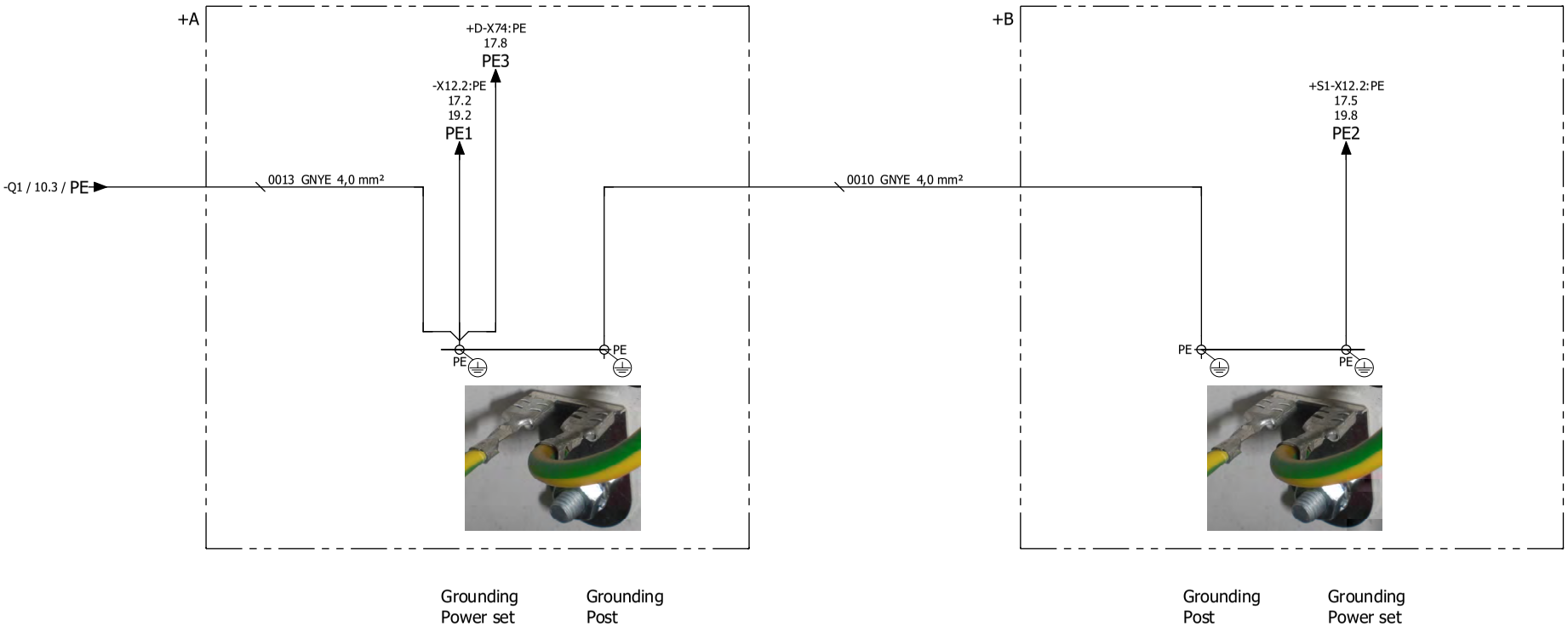

Last modified	14.02.2022	2-Post Lift MA Star 5,5t / 6,5t	Grounding	228.01.005813A	Plant:	Location: +S
Last editor	BFU				Page:	11
					From:	23

-A1.0

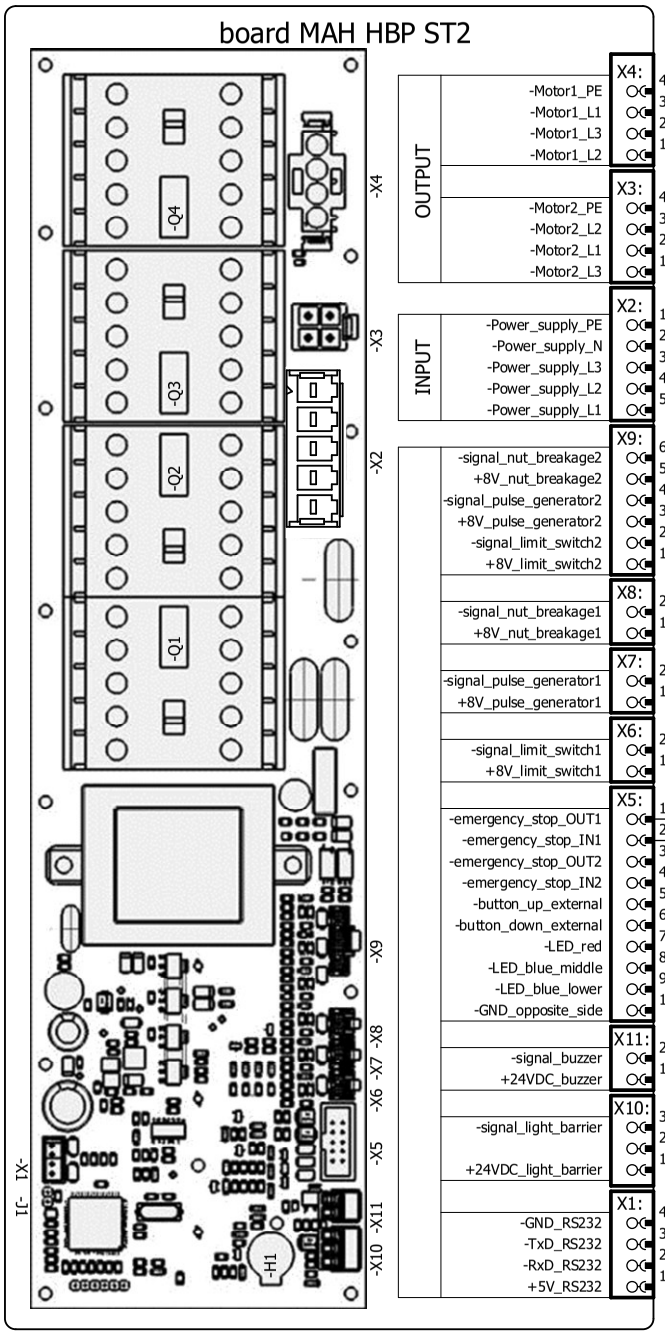

OUTPUT

X4:	-Motor1_PE	/15.3	Motor Post +A
	-Motor1_L1	/15.3	Motor Post +A
	-Motor1_L3	/15.2	Motor Post +A
	-Motor1_L2	/15.2	Motor Post +A
X3:	-Motor2_PE	/15.7	Motor Post +B
	-Motor2_L2	/15.7	Motor Post +B
	-Motor2_L1	/15.6	Motor Post +B
	-Motor2_L3	/15.6	Motor Post +B

INPUT

X2:	-Power_supply_PE	/10.2	Power supply
	-Power_supply_N	/10.1	Power supply
	-Power_supply_L3	/10.1	Power supply
	-Power_supply_L2	/10.1	Power supply
	-Power_supply_L1	/10.1	Power supply
X9:	-signal_nut_breakage2	/16.8	+B-B3 Nut breakage monitoring
	+8V_nut_breakage2	/16.9	+B-B3 Nut breakage monitoring
	-signal_pulse_generator2	/16.7	+B-B1 Leveling monitoring
	+8V_pulse_generator2	/16.7	+B-B1 Leveling monitoring
	-signal_limit_switch2	/16.5	+B-B2 Lift in home position
	+8V_limit_switch2	/16.6	+B-B2 Lift in home position
X8:	-signal_nut_breakage1	/16.3	+A-B3 Nut breakage monitoring
	+8V_nut_breakage1	/16.4	+A-B3 Nut breakage monitoring
X7:	-signal_pulse_generator1	/16.2	+A-B1 Leveling monitoring
	+8V_pulse_generator1	/16.2	+A-B1 Leveling monitoring
X6:	-signal_limit_switch1	/16.0	+A-B2 Lift in home position
	+8V_limit_switch1	/16.1	+A-B2 Lift in home position
X5:	-emergency_stop_OUT1		
	-emergency_stop_IN1		
	-emergency_stop_OUT2		
	-emergency_stop_IN2		
	-button_up_external		
	-button_down_external		
	-LED_red		
	-LED_blue_middle		
	-LED_blue_lower		
	-GND_opposite_side		
X11:	-signal_buzzer	/18.1	-P1 horn
	+24VDC_buzzer	/18.1	-P1 horn
X10:	-signal_light_barrier	/17.9	+D-W74 Light barrier
	+24VDC_light_barrier	/17.8	+D-W74 Light barrier
X1:	-GND_RS232		
	-TxD_RS232		
	-RxD_RS232		
	+5V_RS232		

Jumper removed

Option:
Additional control unit
Column +B

10x0,25 mm²

-A1.0-X5:1	BK	BK
-A1.0-X5:2	VT	VT
-A1.0-X5:3	BU	BU
-A1.0-X5:4	RD	RD
-A1.0-X5:5	GY	GY
-A1.0-X5:6	PK	PK
-A1.0-X5:7	GN	GN
-A1.0-X5:8	YE	YE
-A1.0-X5:9	WH	WH
-A1.0-X5:10	BN	BN

→ -W1.SS1 / 13.4 / +S1-A2.0-X1:-X1:8

Last modified	15.02.2022	2-Post Lift MA Star 5,5t / 6,5t	Overview Control board MAH HBP ST 2	228.01.005813A	Plant: / Location: +S
Last editor	BFU				Page: 12
					From: 23

Option: Additional operating panel Post +B

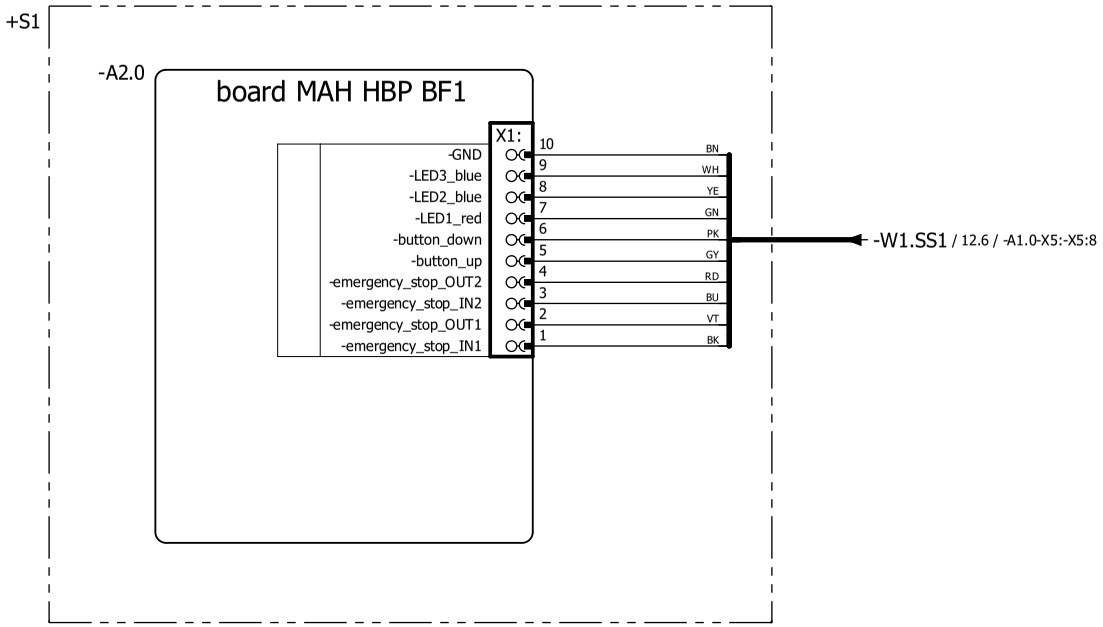

Last modified	14.02.2022	2-Post Lift MA Star 5,5t / 6,5t	Option: Overview Additional operating panel MAH HBF BF 1	228.01.005813A	Plant:	Location: +S
Last editor	BFU				Page:	13
					From:	23

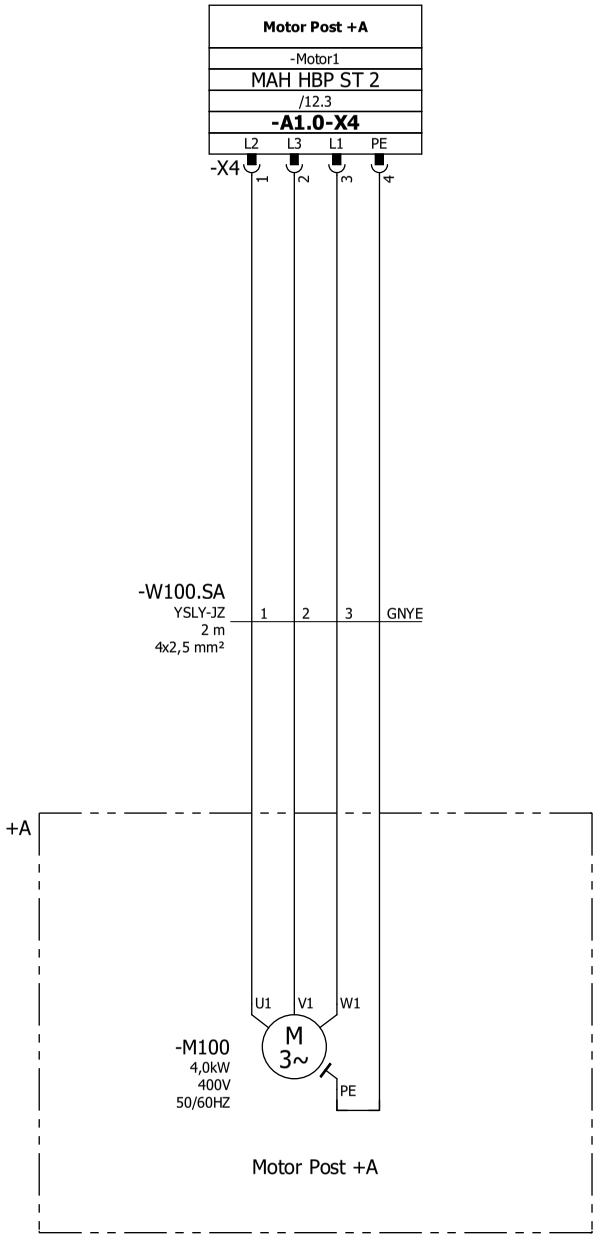

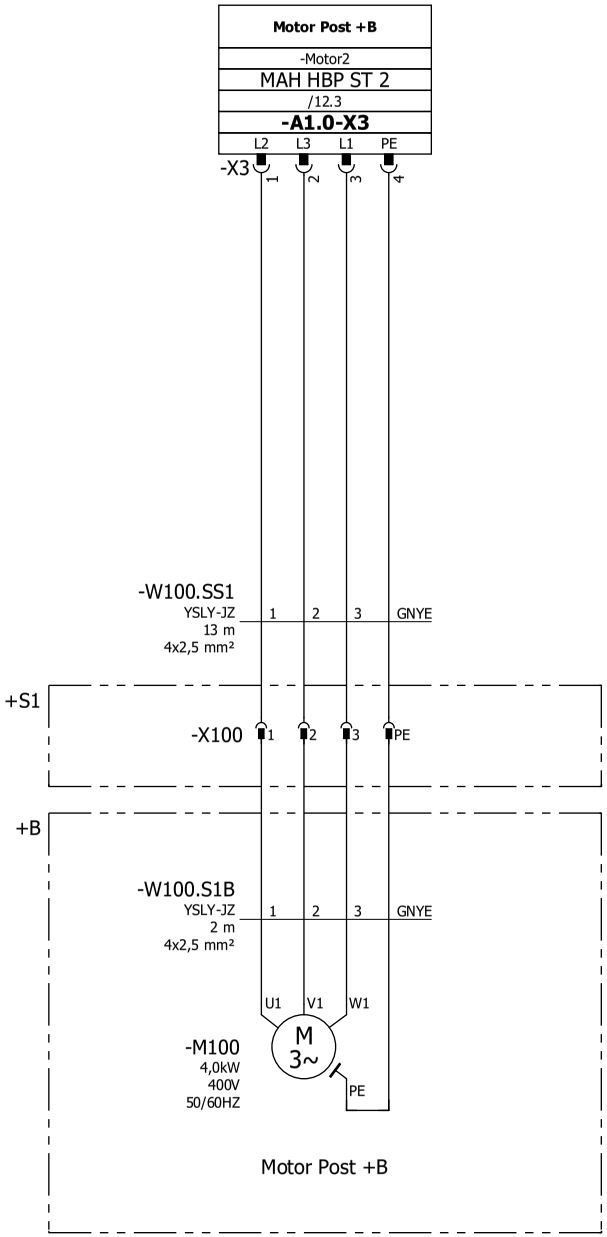

Last modified	14.02.2022	2-Post Lift MA Star 5,5t / 6,5t	basic functions	228.01.005813A	Plant:	Location: +S
Last editor	BFU				Page:	15
					From:	23

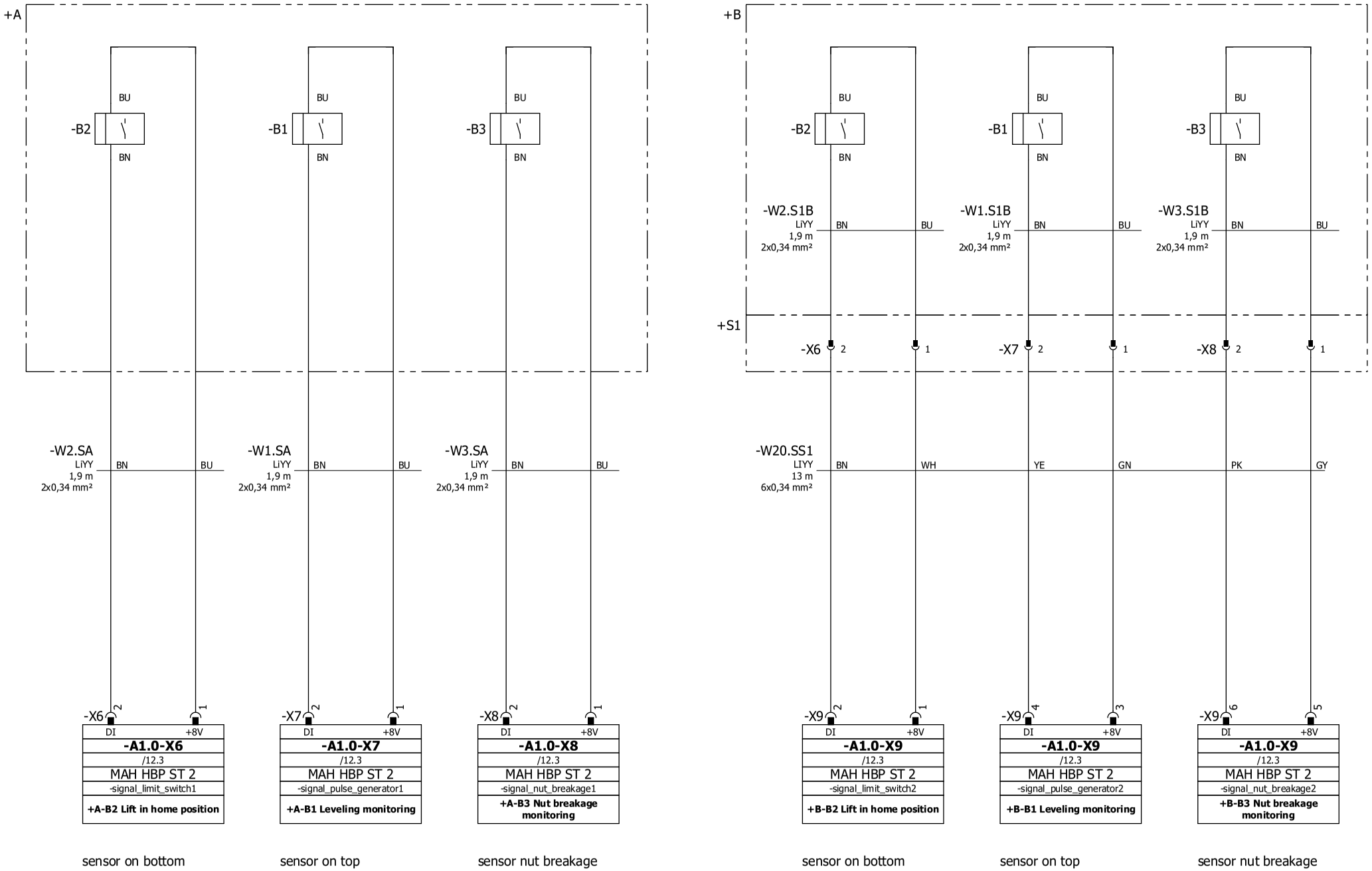

15 17

Last modified	14.02.2022	2-Post Lift MA Star 5,5t / 6,5t	basic functions	228.01.005813A	Plant:	Location: +S
Last editor	BFU				Page:	16
					From:	23

NORMBL_MAHA_SERIE_04

Option: Power set

+A

CAUTION Separate source voltage!
Power supply provided
by the customer
Fuse protection 16A + RCD (30mA)

-X14 L PE N

PE
11.2
PE1

-W12.AS
YSLY-JB
2 m
3x1,5 mm²
BN GNYE BU

0012 GNYE 1,5 mm²

0005 BU 1,5 mm²
0006 GNYE 1,5 mm²
0004 BK 1,5 mm²

-X12.1 L PE N
250 VAC
max.16A

-X12.2 L PE N
250 VAC
max.16A

CAUTION !
Voltage also present
when master switch
is turned off

Shockproof socket
max. 250VAC / 16A

+B

CAUTION Separate source voltage!
Power supply provided
by the customer
Fuse protection 16A + RCD (30mA)

-X14 L PE N

PE
11.7
PE2

+S1

-W12.BS1
YSLY-JB
2 m
3x1,5 mm²
BN GNYE BU

0011 GNYE 1,5 mm²

0008 BU 1,5 mm²
0009 GNYE 1,5 mm²
0007 BK 1,5 mm²

-X12.1 L PE N
250 VAC
max.16A

-X12.2 L PE N
250 VAC
max.16A

CAUTION !
Voltage also present
when master switch
is turned off

Shockproof socket
max. 250VAC / 16A

Option: Ceiling light barrier

+D

-B74
function:
lightswitching
BN WH
BU GY BK

-W74.DD
2 m
4x1 mm²
WH BN BU GY BK

-X74 3 1 PE 2 5 4

-W74.SD
YSLY-JB
15 m
5x1,5 mm²
GY BN GNYE BU BK

-F1
T5A

0017 BK 1,5 mm²

+A-PE3
11.2
PE

L1.1
10.3
-Q1:2

N.1
10.3
-Q1:8

-X10 1 2 3

+24V	DI
-A1.0-X10	
/12.3	
MAH HBP ST 1	
+24VDC_light_barrier	
+D-W74 Light barrier	

Ceiling light barrier

16 18

Last modified	14.02.2022	2-Post Lift MA Star 5,5t / 6,5t	Option Power set Option Ceiling light barrier	228.01.005813A	Plant: / Location: +S
Last editor	BFU				Page: 17
					From: 23

NORMBL_MAHA_SERIE_04

Option: Buzzer with variable loudness Horn

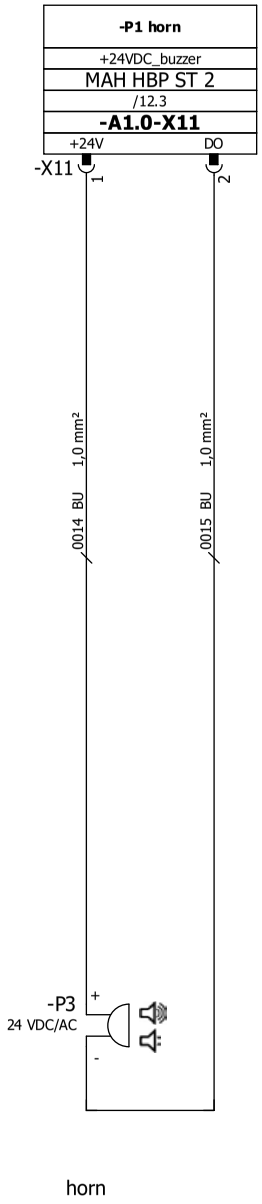

Last modified	14.02.2022	2-Post Lift MA Star 5,5t / 6,5t	Option Buzzer with variable loudness	228.01.005813A	Plant:	Location: +S
Last editor	BFU				Page:	18
					From:	23

OPTION Power set + Buzzer with variable loudness Horn

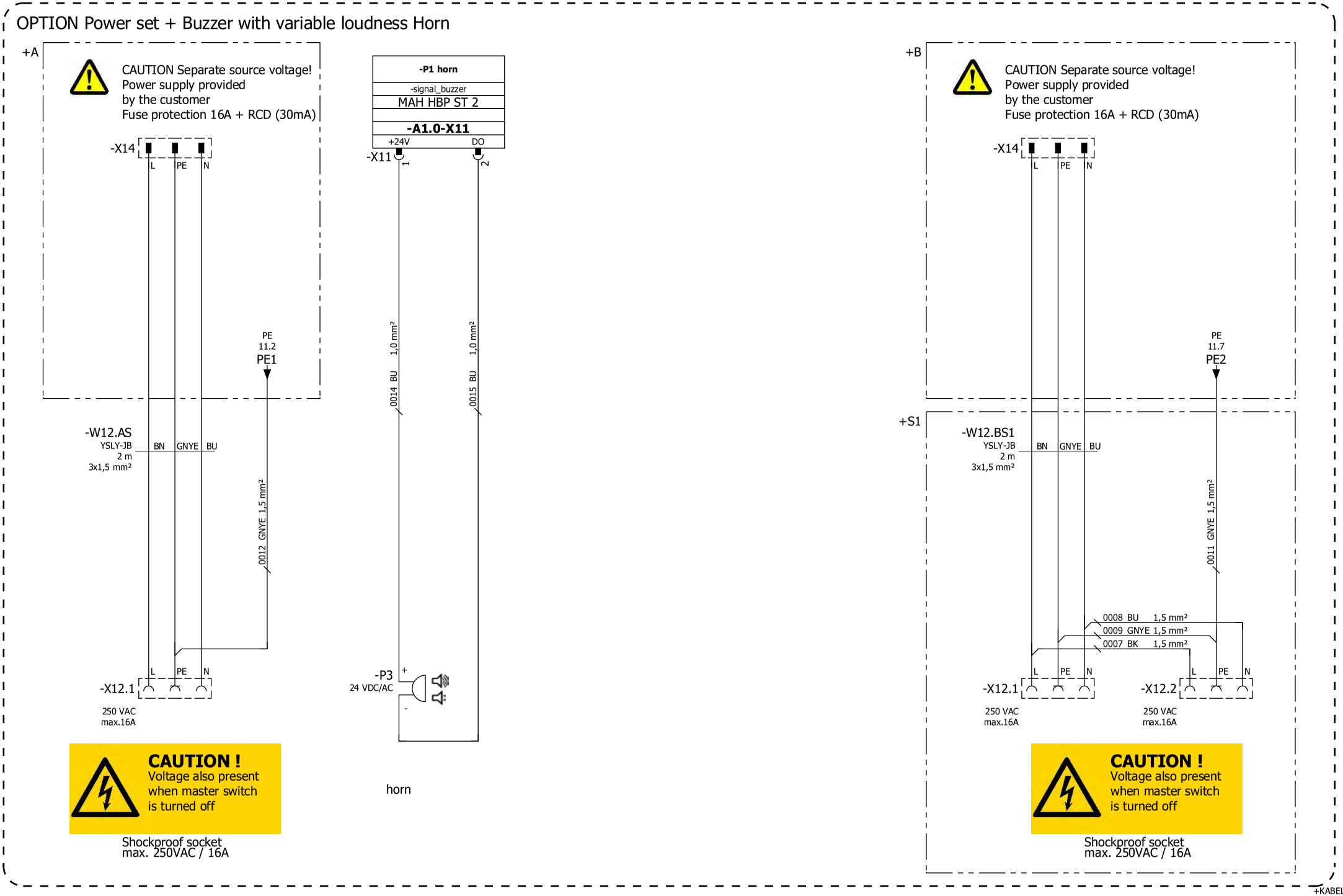

18

+KABEL/20

Last modified	14.02.2022	2-Post Lift MA Star 5,5t / 6,5t	Option Power set + Buzzer with variable loudness	228.01.005813A	Plant:	Location: +S
Last editor	BFU				Page:	19
					From:	23

NORMBL_MAHA_SERIE_04

Cable diagram

KABEPL_MAHA_SERIE_02

Cable name	Cable type	No. of conductors	Cross-section	Cable length	Part number
W1.AS		**5**	**2,5**	**2,3 m**	**1402692**

Function text	/ Page.Path	Target designation from	Connection point	Conductor	Target designation to	Connection point	/ Page.Path	Function text
Power supply	+S/10.1	+S-F2	4	**BK**	+S-Q1	3	+S/10.1	Power supply
=	+S/10.1	+S-F2	2	**BN**	+S-Q1	1	+S/10.1	=
=	+S/10.1	+S-F2	1	**BU**	+S-Q1	7	+S/10.1	=
=	+S/10.2	+S-F2	2	**GNYE**	+S-Q1		+S/10.2	=
=	+S/10.1	+S-F2	6	**GY**	+S-Q1	5	+S/10.1	=

Cable name	Cable type	No. of conductors	Cross-section	Cable length	Part number
W1.S1B	**LiYY**	**2**	**0,34**	**1,9 m**	

Function text	/ Page.Path	Target designation from	Connection point	Conductor	Target designation to	Connection point	/ Page.Path	Function text
sensor on top	+S/16.7	+S1-X7	2	**BN**	+B-B1	BN	+S/16.7	
=	+S/16.7	+S1-X7	1	**BU**	+B-B1	BU	+S/16.7	

Cable name	Cable type	No. of conductors	Cross-section	Cable length	Part number
W1.SA	**LiYY**	**2**	**0,34**	**1,9 m**	

Function text	/ Page.Path	Target designation from	Connection point	Conductor	Target designation to	Connection point	/ Page.Path	Function text
+A-B1 Leveling monitoring	+S/16.2	+S-A1.0-X7	-X7:2	**BN**	+A-B1	BN	+S/16.2	
=	+S/16.2	+S-A1.0-X7	-X7:1	**BU**	+A-B1	BU	+S/16.2	

Cable name	Cable type	No. of conductors	Cross-section	Cable length	Part number
W1.SS	**YSLY-JB**	**5**	**2,5**	**0,54 m**	

Function text	/ Page.Path	Target designation from	Connection point	Conductor	Target designation to	Connection point	/ Page.Path	Function text
Power supply	+S/10.1	+S-A1.0-X2	-X2:4	**BK**	+S-Q1	4	+S/10.1	Power supply
=	+S/10.1	+S-A1.0-X2	-X2:5	**BN**	+S-Q1	2	+S/10.1	=
=	+S/10.1	+S-A1.0-X2	-X2:2	**BU**	+S-Q1	8	+S/10.1	=
=	+S/10.2	+S-A1.0-X2	-X2:1	**GNYE**	+S-Q1		+S/10.2	=
=	+S/10.1	+S-A1.0-X2	-X2:3	**GY**	+S-Q1	6	+S/10.1	=

Cable name	Cable type	No. of conductors	Cross-section	Cable length	Part number
W1.SS1		**10**	**0,25**		**1400656**

Function text	/ Page.Path	Target designation from	Connection point	Conductor	Target designation to	Connection point	/ Page.Path	Function text
	+S/12.5	+S-A1.0-X5	-X5:1	**BK**	+S1-A2.0-X1	-X1:1	+S/13.2	
	+S/12.5	+S-A1.0-X5	-X5:10	**BN**	+S1-A2.0-X1	-X1:10	+S/13.2	
	+S/12.5	+S-A1.0-X5	-X5:3	**BU**	+S1-A2.0-X1	-X1:3	+S/13.2	
	+S/12.5	+S-A1.0-X5	-X5:7	**GN**	+S1-A2.0-X1	-X1:7	+S/13.2	
	+S/12.5	+S-A1.0-X5	-X5:5	**GY**	+S1-A2.0-X1	-X1:5	+S/13.2	
	+S/12.5	+S-A1.0-X5	-X5:6	**PK**	+S1-A2.0-X1	-X1:6	+S/13.2	
	+S/12.5	+S-A1.0-X5	-X5:4	**RD**	+S1-A2.0-X1	-X1:4	+S/13.2	
	+S/12.5	+S-A1.0-X5	-X5:2	**VT**	+S1-A2.0-X1	-X1:2	+S/13.2	
	+S/12.5	+S-A1.0-X5	-X5:9	**WH**	+S1-A2.0-X1	-X1:9	+S/13.2	
	+S/12.5	+S-A1.0-X5	-X5:8	**YE**	+S1-A2.0-X1	-X1:8	+S/13.2	

NORMBL_MAHA_SERIE_04

Cable diagram

KABEPL_MAHA_SERIE_02

Cable name	Cable type	No. of conductors	Cross-section	Cable length	Part number
W2.S1B	**LiYY**	**2**	**0,34**	**1,9 m**	

Function text	/ Page.Path	Target designation from	Connection point	Conductor	Target designation to	Connection point	/ Page.Path	Function text
sensor on bottom	+S/16.5	+S1-X6	2	**BN**	+B-B2	BN	+S/16.5	
=	+S/16.6	+S1-X6	1	**BU**	+B-B2	BU	+S/16.5	

Cable name	Cable type	No. of conductors	Cross-section	Cable length	Part number
W2.SA	**LiYY**	**2**	**0,34**	**1,9 m**	

Function text	/ Page.Path	Target designation from	Connection point	Conductor	Target designation to	Connection point	/ Page.Path	Function text
+A-B2 Lift in home position	+S/16.0	+S-A1.0-X6	-X6:2	**BN**	+A-B2	BN	+S/16.0	
=	+S/16.1	+S-A1.0-X6	-X6:1	**BU**	+A-B2	BU	+S/16.0	

Cable name	Cable type	No. of conductors	Cross-section	Cable length	Part number
W3.S1B	**LiYY**	**2**	**0,34**	**1,9 m**	

Function text	/ Page.Path	Target designation from	Connection point	Conductor	Target designation to	Connection point	/ Page.Path	Function text
sensor nut breakage	+S/16.8	+S1-X8	2	**BN**	+B-B3	BN	+S/16.8	
=	+S/16.9	+S1-X8	1	**BU**	+B-B3	BU	+S/16.8	

Cable name	Cable type	No. of conductors	Cross-section	Cable length	Part number
W3.SA	**LiYY**	**2**	**0,34**	**1,9 m**	

Function text	/ Page.Path	Target designation from	Connection point	Conductor	Target designation to	Connection point	/ Page.Path	Function text
+A-B3 Nut breakage monitoring	+S/16.3	+S-A1.0-X8	-X8:2	**BN**	+A-B3	BN	+S/16.3	
=	+S/16.4	+S-A1.0-X8	-X8:1	**BU**	+A-B3	BU	+S/16.3	

Cable name	Cable type	No. of conductors	Cross-section	Cable length	Part number
W20.SS1	**LIYY**	**6**	**0,34**	**13 m**	**1402696**

Function text	/ Page.Path	Target designation from	Connection point	Conductor	Target designation to	Connection point	/ Page.Path	Function text
sensor on bottom	+S/16.5	+S1-X6	2	**BN**	+S-A1.0-X9	-X9:2	+S/16.5	+B-B2 Lift in home position
sensor on top	+S/16.7	+S1-X7	1	**GN**	+S-A1.0-X9	-X9:3	+S/16.7	+B-B1 Leveling monitoring
sensor nut breakage	+S/16.9	+S1-X8	1	**GY**	+S-A1.0-X9	-X9:5	+S/16.9	+B-B3 Nut breakage monitoring
=	+S/16.8	+S1-X8	2	**PK**	+S-A1.0-X9	-X9:6	+S/16.8	=
sensor on bottom	+S/16.6	+S1-X6	1	**WH**	+S-A1.0-X9	-X9:1	+S/16.6	+B-B2 Lift in home position
sensor on top	+S/16.7	+S1-X7	2	**YE**	+S-A1.0-X9	-X9:4	+S/16.7	+B-B1 Leveling monitoring

Cable name	Cable type	No. of conductors	Cross-section	Cable length	Part number
W100.S1B	**YSLY-JZ**	**4**	**2,5**	**2 m**	

Function text	/ Page.Path	Target designation from	Connection point	Conductor	Target designation to	Connection point	/ Page.Path	Function text
Motor Post +B	+S/15.6	+S1-X100	1	**1**	+B-M100	U1	+S/15.6	Motor Post +B
=	+S/15.6	+S1-X100	2	**2**	+B-M100	V1	+S/15.6	=
=	+S/15.7	+S1-X100	3	**3**	+B-M100	W1	+S/15.6	=
=	+S/15.7	+S1-X100	PE	**GNYE**	+B-M100	PE	+S/15.6	=

NORMBL_MAHA_SERIE_04

Cable diagram

KABEPL_MAHA_SERIE_02

Cable name	Cable type	No. of conductors	Cross-section	Cable length	Part number
W100.SA	**YSLY-JZ**	**4**	**2,5**	**2 m**	

Function text	/ Page.Path	Target designation from	Connection point	Conductor	Target designation to	Connection point	/ Page.Path	Function text
Motor Post +A	+S/15.2	+S-A1.0-X4	-X4:1	**1**	+A-M100	U1	+S/15.2	Motor Post +A
=	+S/15.2	+S-A1.0-X4	-X4:2	**2**	+A-M100	V1	+S/15.2	=
=	+S/15.3	+S-A1.0-X4	-X4:3	**3**	+A-M100	W1	+S/15.2	=
=	+S/15.3	+S-A1.0-X4	-X4:4	**GNYE**	+A-M100	PE	+S/15.2	=

Cable name	Cable type	No. of conductors	Cross-section	Cable length	Part number
W100.SS1	**YSLY-JZ**	**4**	**2,5**	**13 m**	**1402693**

Function text	/ Page.Path	Target designation from	Connection point	Conductor	Target designation to	Connection point	/ Page.Path	Function text
Motor Post +B	+S/15.6	+S1-X100	1	**1**	+S-A1.0-X3	-X3:1	+S/15.6	Motor Post +B
=	+S/15.6	+S1-X100	2	**2**	+S-A1.0-X3	-X3:2	+S/15.6	=
=	+S/15.7	+S1-X100	3	**3**	+S-A1.0-X3	-X3:3	+S/15.7	=
=	+S/15.7	+S1-X100	PE	**GNYE**	+S-A1.0-X3	-X3:4	+S/15.7	=

NORMIBL_MAHA_SERIE_04

Parts list

ARTIST_MAHA_SERIE_02

RKZ Placement	Quantity ME	designation	Type number Order number	manufacturer	MAHA-Part No.
+DOKU-S200 +DOKU/9.7	1 piece	Push button Emergency stop	M22 1.30.273.501/0300	Rafi	1401137
+S-A1.0 +S/12.0	1	board Post-Lift MASTAR	MAH HBP ST2	Knestel-Electronic	1402508
+S-F1 +S/17.8	1 piece	fuse holder	FX0380 53 0370	BULGIN	1238091
+S-F1 +S/17.8	1 piece	Miniature fuse	T 5,0 A 53 3150		1239490
+S-P3 +S/18.1	1 piece	Buzzer Enclosure mounting, Adjustable volume	BU2 B100520405	J. AUER Signalgeräte GmbH	1234469
+S-X12.1 +S/17.1	1 piece	SCHUKO Socket Enclosure mounting	11012 11012	Mennekes Elektrotechnik GmbH & Co. KG	1401133
+S-X12.2 +S/17.2	1 piece	SCHUKO Socket Enclosure mounting	11012 11012	Mennekes Elektrotechnik GmbH & Co. KG	1401133
+D-B74 +S/17.8	1 Piece	Ceiling light barrier	1401395	Maschinenbau Haldenwang	1401395
+B-B1 +S/16.7	1 piece	Proximity switch induktiv		Wachendorff GmbH & Co. KG	1401242
+B-B2 +S/16.5	1 piece	Proximity switch induktiv		Wachendorff GmbH & Co. KG	1401242
+B-B3 +S/16.8	1 piece	Proximity switch induktiv		Wachendorff GmbH & Co. KG	1401242
+B-X14 +S/17.4	1 piece	SCHUKO-Stecker 2P + PE	Type 13 1401135	Bachmann	1401135
+A-B1 +S/16.2	1 piece	Proximity switch induktiv		Wachendorff GmbH & Co. KG	1401242
+A-B2 +S/16.0	1 piece	Proximity switch induktiv		Wachendorff GmbH & Co. KG	1401242
+A-B3 +S/16.3	1 piece	Proximity switch induktiv		Wachendorff GmbH & Co. KG	1401242
+A-X14 +S/17.1	1 piece	SCHUKO-Stecker 2P + PE	Type 13 1401135	Bachmann	1401135
+S1-A2.0 +S/13.1	1	board Additional operating panelMASTAR	MAH HBP BF 1	Knestel-Electronic	1400603
+S1-X12.1 +S/17.4	1 piece	SCHUKO Socket Enclosure mounting	11012 11012	Mennekes Elektrotechnik GmbH & Co. KG	1401133
+S1-X12.2 +S/17.5	1 piece	SCHUKO Socket Enclosure mounting	11012 11012	Mennekes Elektrotechnik GmbH & Co. KG	1401133
W1.AS +S/10.1	1				1402692
W1.SS1 +S/12.5	1 Piece	cable assembly Connecting Cable Additional operating panel Post +B	1400656	Baude Kabeltechnick	1400656
W12.AS +S/17.1	1				1401397

Parts list

ARTIST_MAHA_SERIE_02

RKZ *Placement*	*Quantity* *ME*	*designation*	*Type number* *Order number*	*manufacturer*	*MAHA-Part No.*
W12.BS1 +S/17.4	1				1401397
W20.SS1 +S/16.5	1 Piece	cable assembly sensor distributor slave column	1402696	Baude Kabeltechnick	1402696
W100.SS1 +S/15.6	1	cable assembly Motor Slave Column	1402693	Baude Kabeltechnick	1402693

Product Data Sheets and Foundation Plans

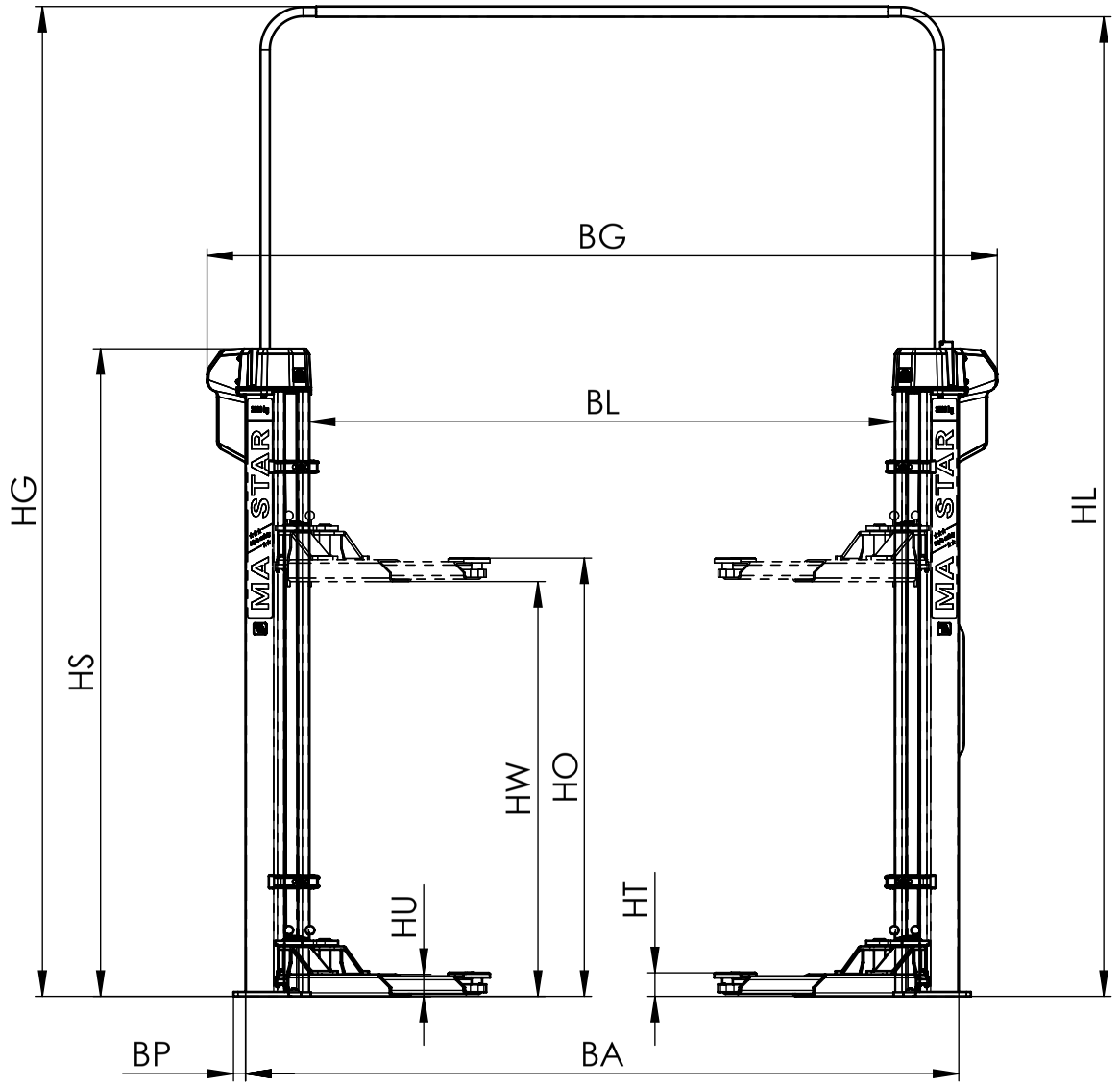

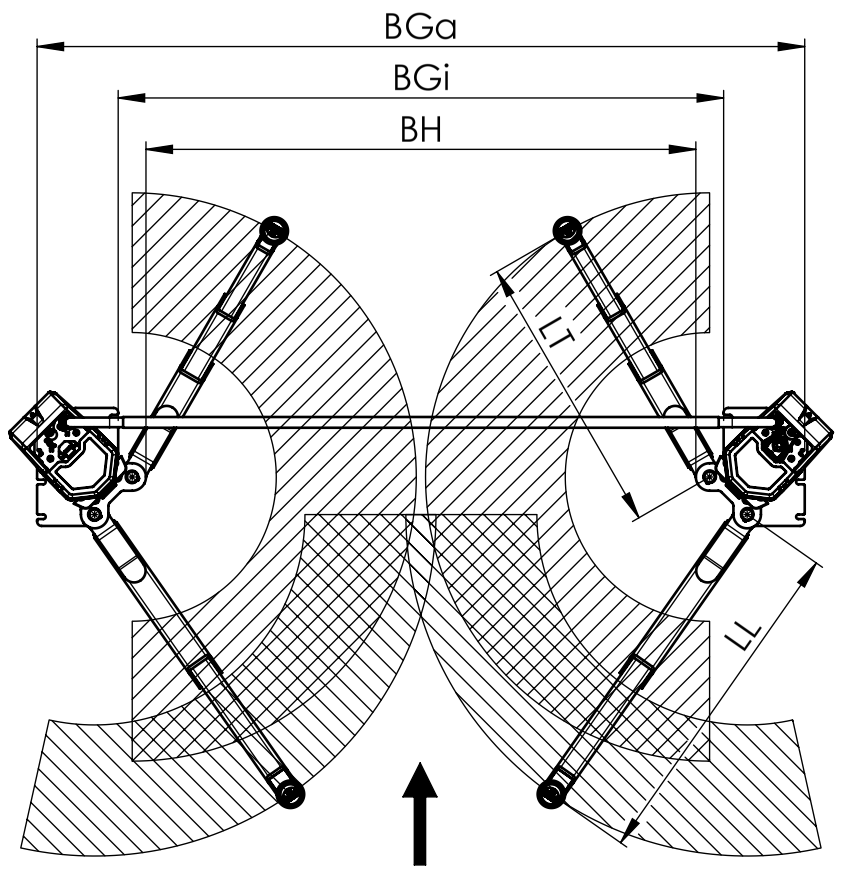

technical data

VP 251230 / VP 251232		MA STAR 3.5 A
total height	HG	4499mm**
total width	BG	3592mm*
clear height	HL	4452mm**
column height	HS	2943mm**
vertical travel	HW	1885mm
length of stroke max.	HO	1995mm**
pivoting height min.	HU	100mm** (80mm***)
adjusting range of support disk	HT	80mm-110mm**
extension length of short support arm	LT	630mm-1240mm
pivoting range of short support arm		180°
extension length of long support arm	LL	920mm-1490mm
pivoting range of long support arm		102,5°
column clearance	BL	2660mm*
outer column width	BA	3242mm*
baseplate overlap	BP	55mm
outer width of baseplate	BGa	3351mm*
inner width of baseplate	BGi	2643mm*
drive-through clearance	BH	2400mm (2300mm-2450mm)
load capacity		3500kg
operating temperature		+5...+40°C
dead weight (incl. packaging)		650kg (740kg)
packaging dimension (L x W x H)		2900mm x 1100mm x 710mm
anchorage		HILTI HIT-HY 200-A + HAS-U 5.8 M16
concrete quality		min. C20/25 (DIN EN 1992)
rated capacity		2 x 3.0 kW (S3-20%)
power supply	50Hz	3x400V +N +PE; C16A + RCD (30mA)
		3x220-230V +N +PE; C25A + RCD (30mA) (VZ 990492)
	60Hz	3x380-400V +N +PE; C16A + RCD (30mA) (VZ 990491)
		3x220-230V +N +PE; C25A + RCD (30mA) (VZ 990499)
air supply *(provided by the customer)*	8 bar	max. available flow rate at 6 bar working pressure
		100 l/min (VZ 990488/VZ 990489)
		300 l/min (VZ 990500/VZ 990501)
lifting time		40s

* Dimensions refer to recommended drive-through clearance BH = 2400mm
Attention: Using VZ 971607 (door strike protection) the drive-through clearance is reduced by 35mm

** Using VZ 971594 (mounting plates for reduced foundation thickness)
the marked dimensions increase by 20mm

*** pivoting height for VZ 971459 (supports arms for sports cars)

Schutzvermerk beachten nach DIN ISO 16016	Maßstab 1:33	Materialnummer 1400028	Revision 03		
	Konfigurationstyp	Dokumenttyp Hauptzeichnung	Änderungsnr. 100306	Büro 300	
MAHAGROUP	Benennung **MA STAR 3.5 A - Product Datasheet**				
	Dokumentnummer **F4770**		Version **D**	A3	Blatt / von
Datum, Ersteller 30.8.2022 MKRAUS	Datum, Prüfer 31.08.2022 MKRAUS	Datum, Freigabe 01.09.2022 MKRAUS	alte Materialnummer		

SWG/10000038/DE/D

MAHA MKRAUS 01.09.2022 12:54:16

MA STAR triple safety *****

MA STAR 3.5 A (VP 251230 / VP 251232)

Attention:
The quality of the foundation plate has to be checked by the client prior to installation!

All dimension in m
All dimensions have to be checked on site
In case of ductwork, use max. 45° bends

Supply line in-ground	Supply line via ceiling
Install ductwork for cables Ø50mm, Insert the cable with an overlap of approx. 4m. Place the cable at the right column!	Place the cable at the right column. Connection by CEE-plug device 16A 5p 6h. Must be prepared and certified beforehand!

Attention:
All highlighted dimensions refer to the recommended drive through clearance of 2,40m! (see technical datasheet)

Supply line:
3x400V +N +PE; C16A + RCD (30mA); rated power 2x3,0kW
min. cross-sectional area of supply line 5x2,5 mm2

Connection of columns left-right via cable brigde prepared for optional in-ground wiring

The electrical connection of the Energy-Kit must be prepard on site.
Connection by Schuko plug device (1x230V, 16A + RCD(30mA)) at the corresponding column.
The power line and plug device must be prepared and certified beforehand!
In case of compressed air supply, a pneumatic hose Ø9mm has to be placed at the corresponding column (air supply 8 bar).

The locally applicable regulations and standards must be fullfilled for all electrical installations!

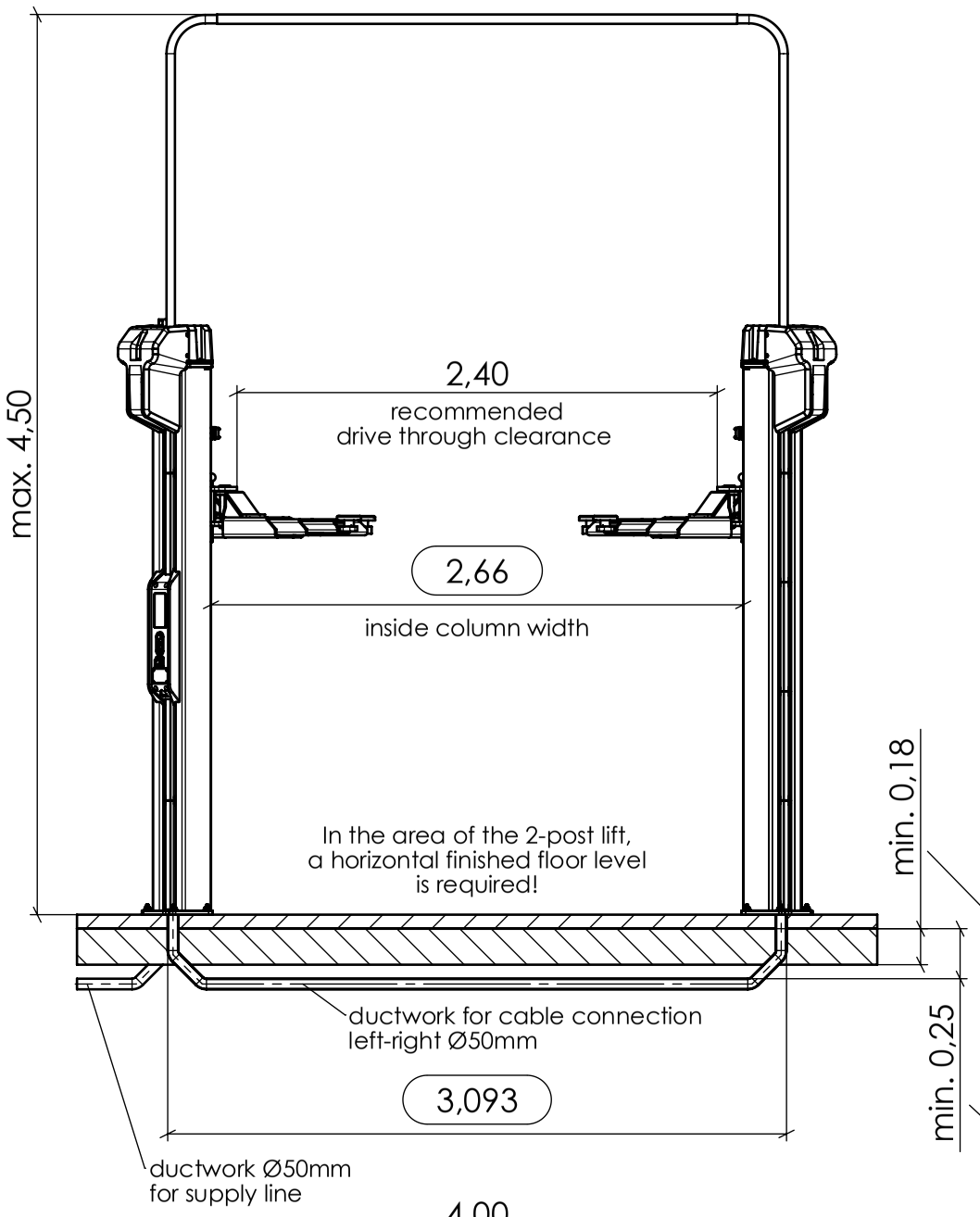

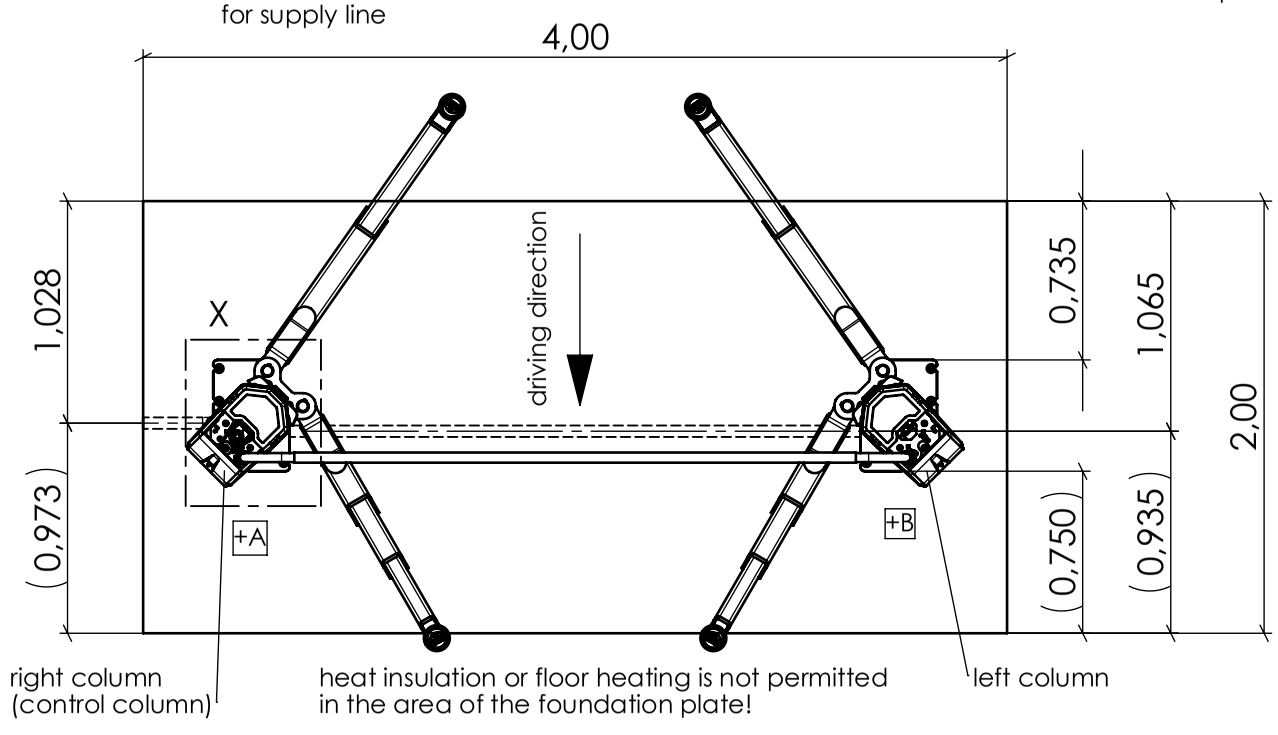

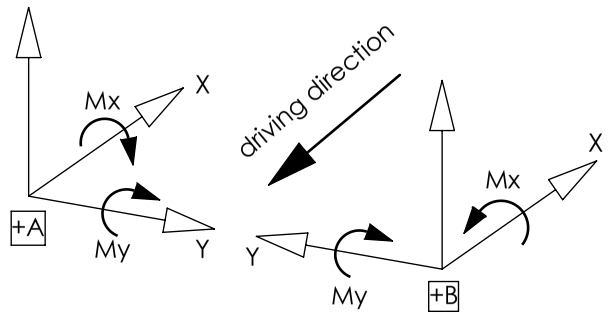

Type	max. load (N)		max. torque (Nm) per column	
	dead weight of lift (N)	rated capacity (N)	Mx	My
MA STAR 3.5 A	6.500	35.000	20.030	16.740

calculation of load according to EN 1493:2010 without consideration of safety factors

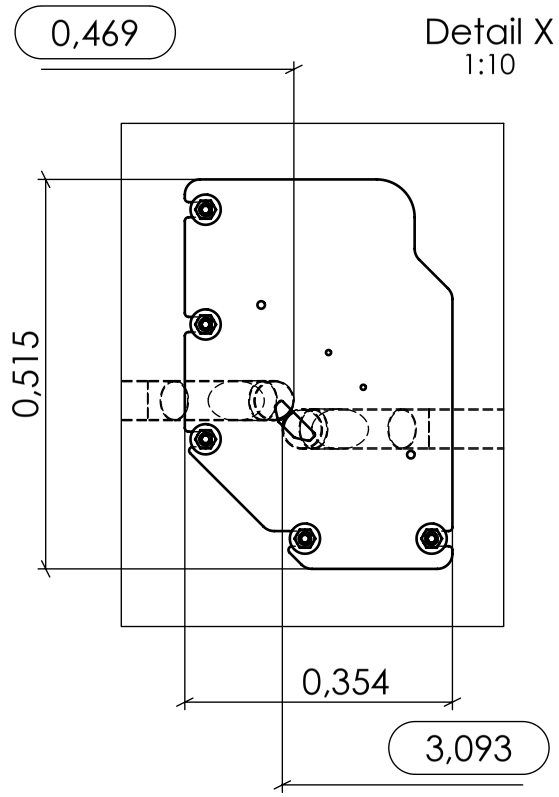

Detail X
1:10

Anchorage
1:5
follow the assembly instructions!

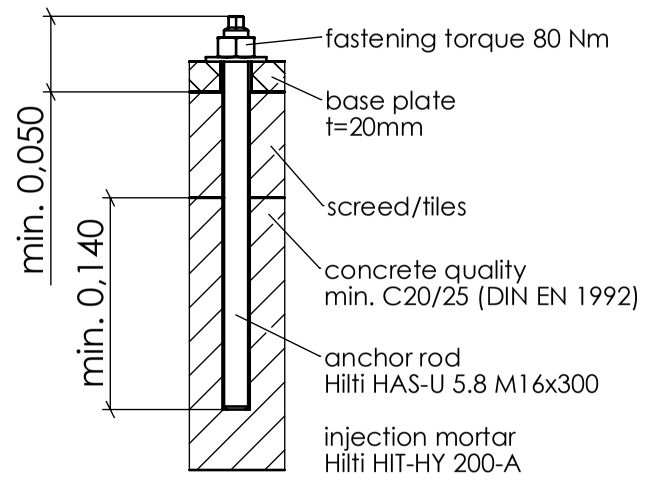

Attention:
The installation material VM 999079 is only certified for max. 100mm height of floor construction (screed/tiles)
The standard installation material can not be used for higher floor constructions!
(Please notify before installation)

Schutzvermerk beachten nach DIN ISO 16016	Maßstab 1:35	Materialnummer 1402125	Revision 03
	Konfigurationstyp Fundamentplan	Dokumenttyp	Änderungsnr. 100399 / Büro 300
MAHA GROUP	Benennung **MA STAR 3.5 A - foundation plan**		
	Dokumentnummer **F4771**	Version **D** / A3	Blatt 1 / von 1
Datum, Ersteller 31.3.2021 MKRAUS	Datum, Prüfer 01.04.2021 RIWAGNER	Datum, Freigabe 01.04.2021 MKRAUS	alte Materialnummer

SWG/10010968/DE/D

MAHA MKRAUS 01.04.2021 08:53:41

MA STAR triple safety *****

MA STAR 3.5 A on mounting plates (VZ 971594)

Attention:
The quality of the foundation plate has to be checked by the client prior to installation!

All dimension in m
All dimensions have to be checked on site
In case of ductwork, use max. 45° bends

Supply line in-ground	Supply line via ceiling
Install ductwork for cables Ø50mm, Insert the cable with an overlap of approx. 4m. Place the cable at the right column!	Place the cable at the right column. Connection by CEE-plug device 16A 5p 6h. Must be prepared and certified beforehand!

Attention:
All highlighted dimensions refer to the recommended drive through clearance of 2,40m! (see technical datasheet)

Supply line:
3x400V +N +PE; C16A + RCD (30mA); rated power 2x3,0kW
min. cross-sectional area of supply line 5x2,5 mm2

Connection of columns left-right via cable brigde prepared for optional in-ground wiring

The electrical connection of the Energy-Kit must be prepard on site.
Connection by Schuko plug device (1x230V, 16A + RCD(30mA)) at the corresponding column.
The power line and plug device must be prepared and certified beforehand!
In case of compressed air supply, a pneumatic hose Ø9mm has to be placed at the corresponding column (air supply 8 bar).

The locally applicable regulations and standards must be fullfilled for all electrical installations!

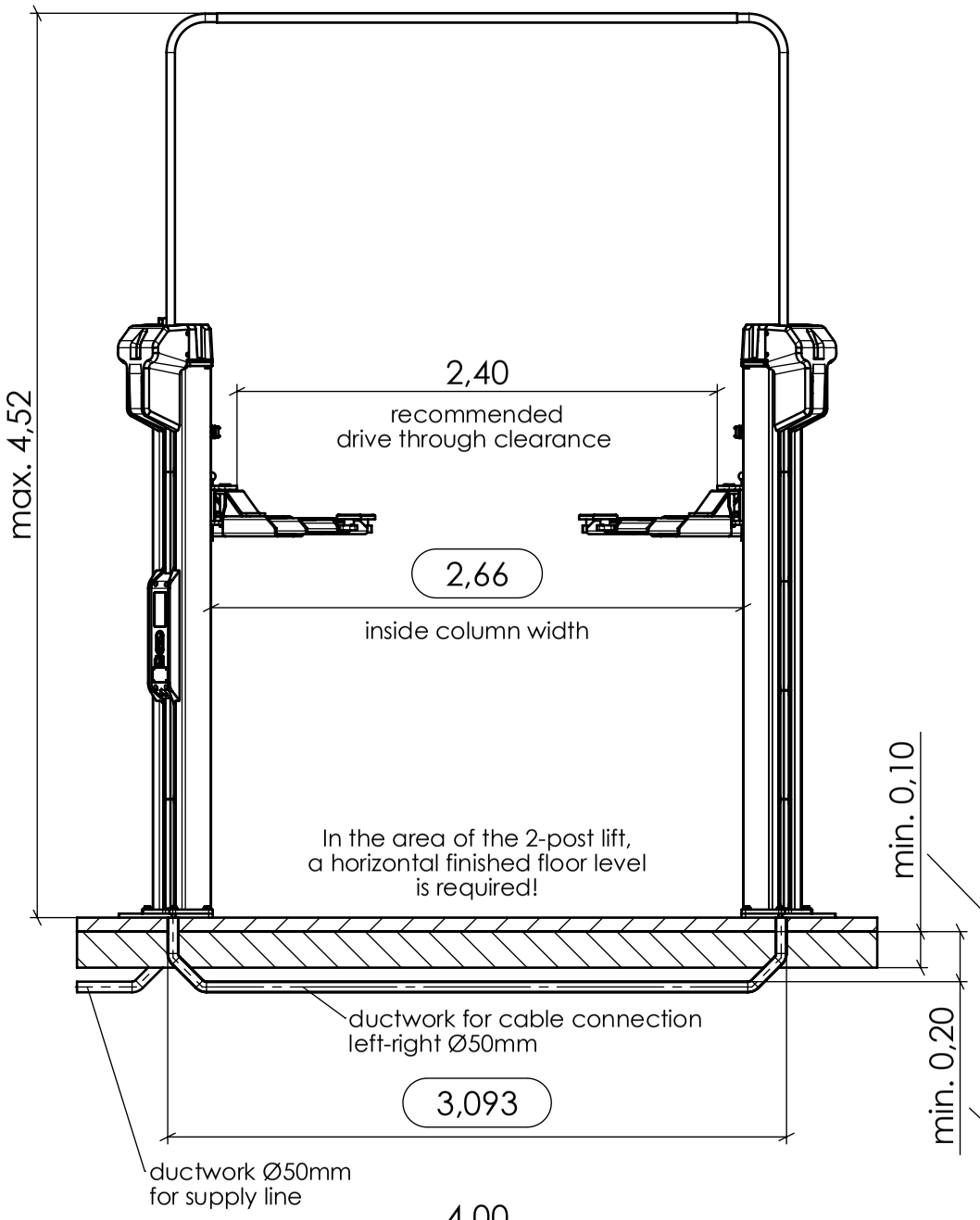

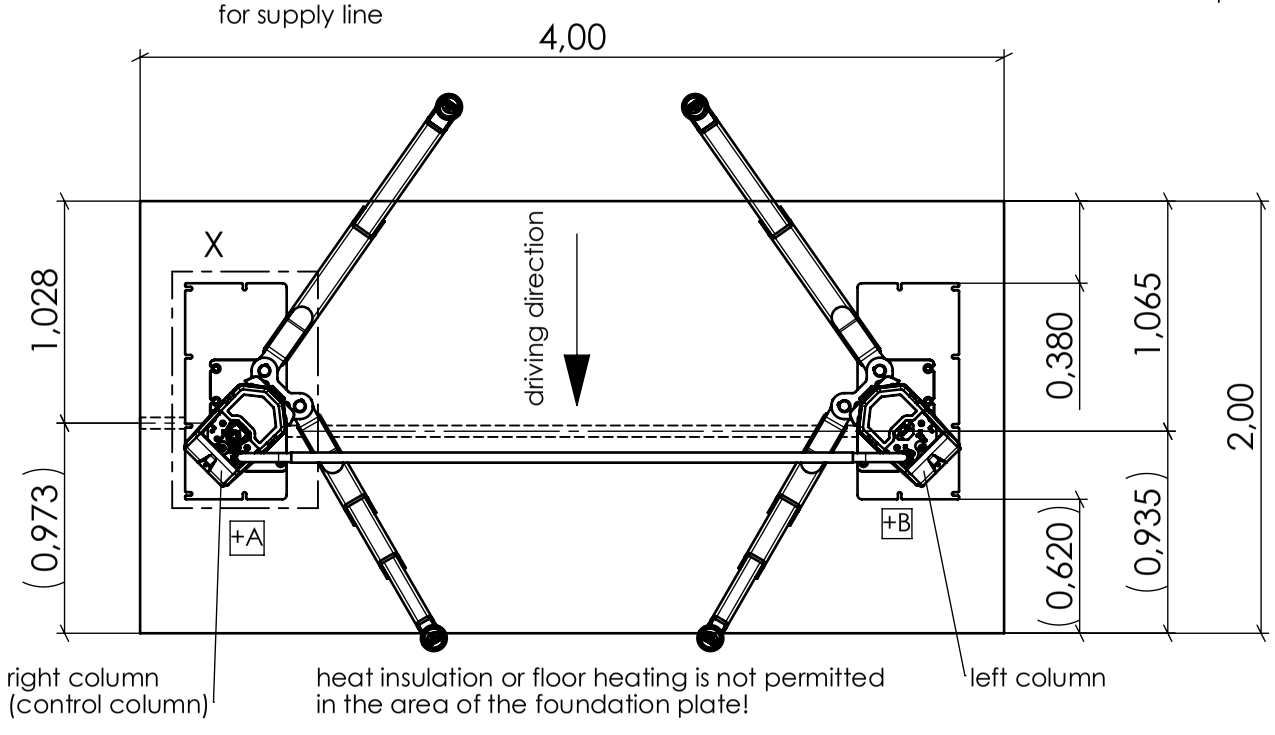

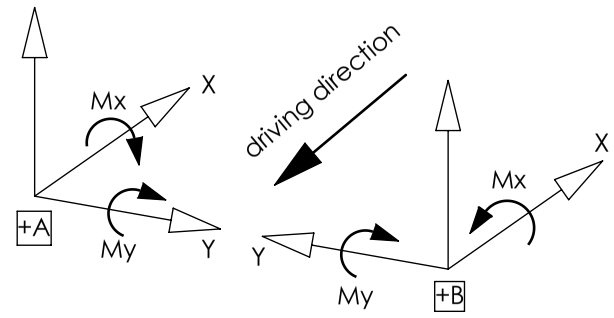

Type	max. load (N)		max. torque (Nm) per column	
	dead weight of lift (N)	rated capacity (N)	Mx	My
MA STAR 3.5 A	6.500	35.000	20.030	16.740
calculation of load according to EN 1493:2010 without consideration of safety factors				

Detail X
1:15

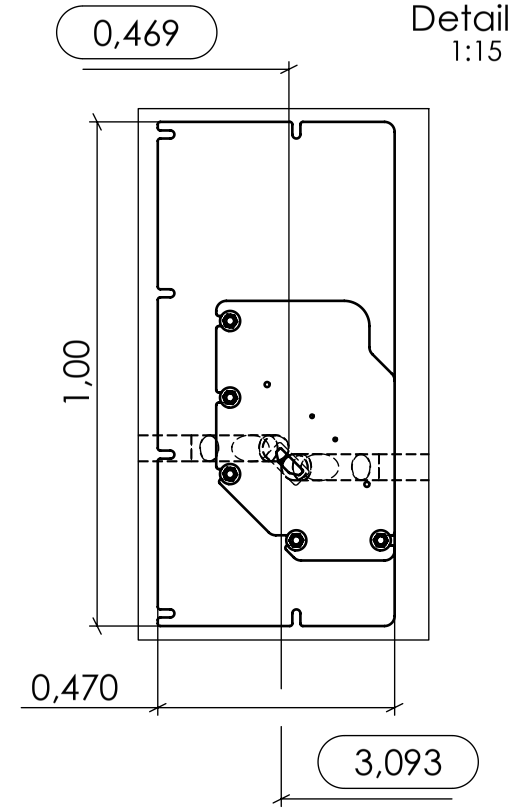

Anchorage
1:5
follow the assembly instructions!

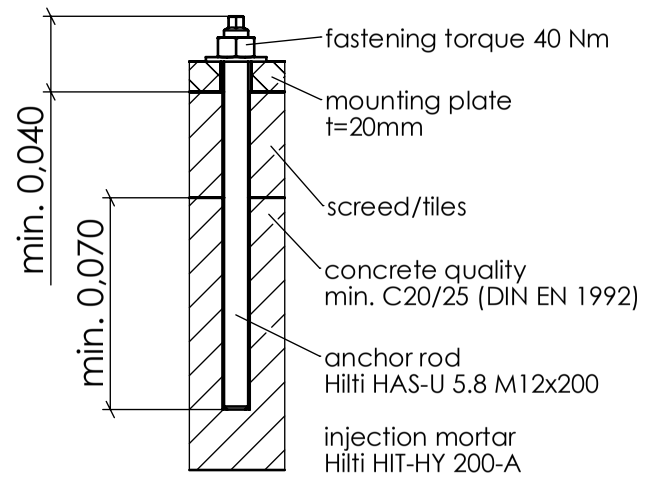

Attention:
The installation material VM 999054 is only certified for max. 90mm height of floor construction (screed/tiles)
The standard installation material can not be used for higher floor constructions!
(Please notify before installation)

Schutzvermerk beachten nach DIN ISO 16016	Maßstab 1:35	Materialnummer 1402125	Revision 03	
	Konfigurationstyp Fundamentplan	Dokumenttyp	Änderungsnr. 100399	Büro 300
MAHA GROUP	Benennung **MA STAR 3.5 A with mounting plates - foundation plan**			
	Dokumentnummer **F4772**	Version **D**	A3	Blatt 1 / von 1
Datum, Ersteller 31.3.2021 MKRAUS	Datum, Prüfer 01.04.2021 RIWAGNER	Datum, Freigabe 01.04.2021 MKRAUS	alte Materialnummer	

SWG/10010968/DE/D

MAHA MKRAUS 01.04.2021 08:53:41

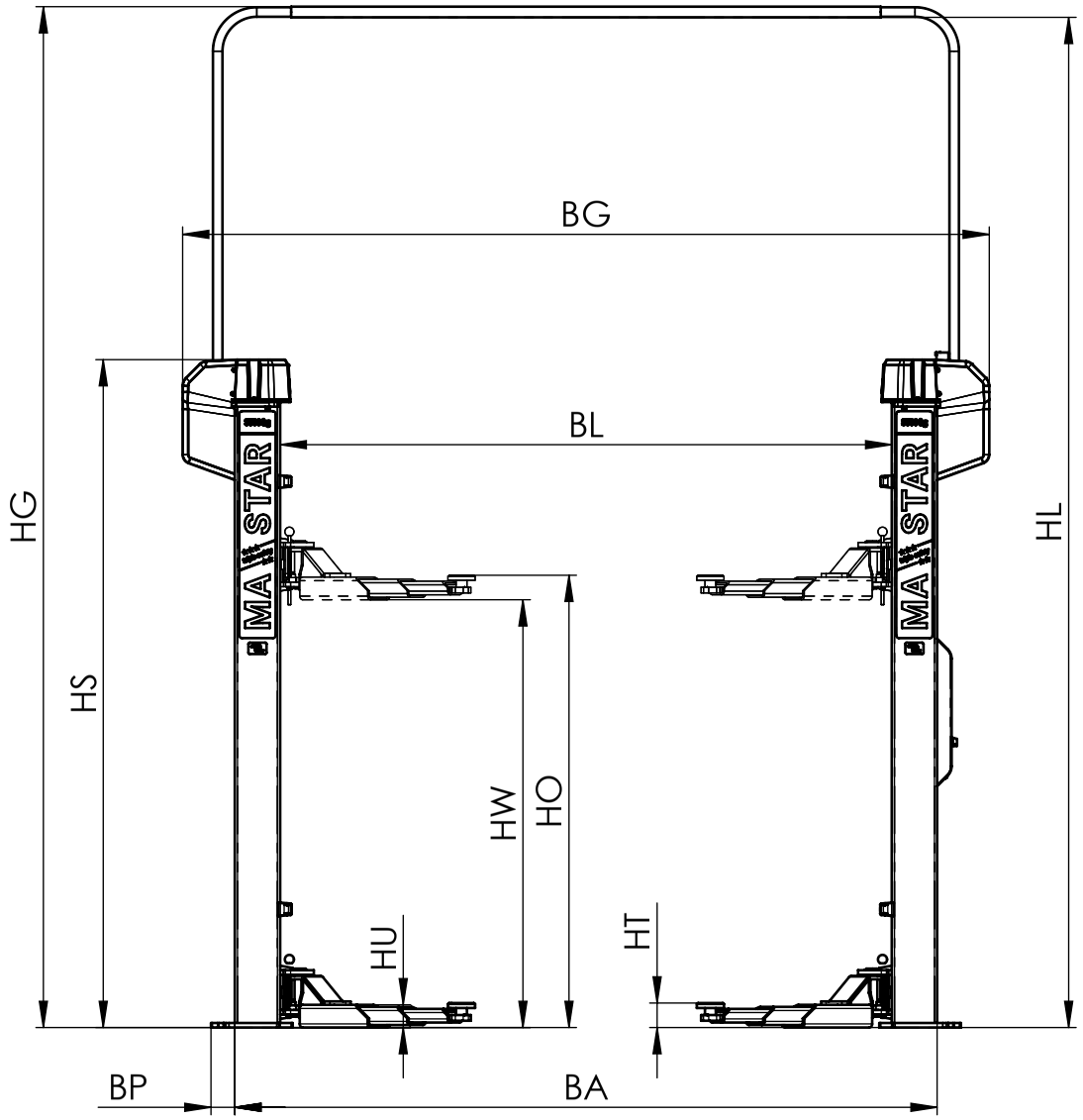

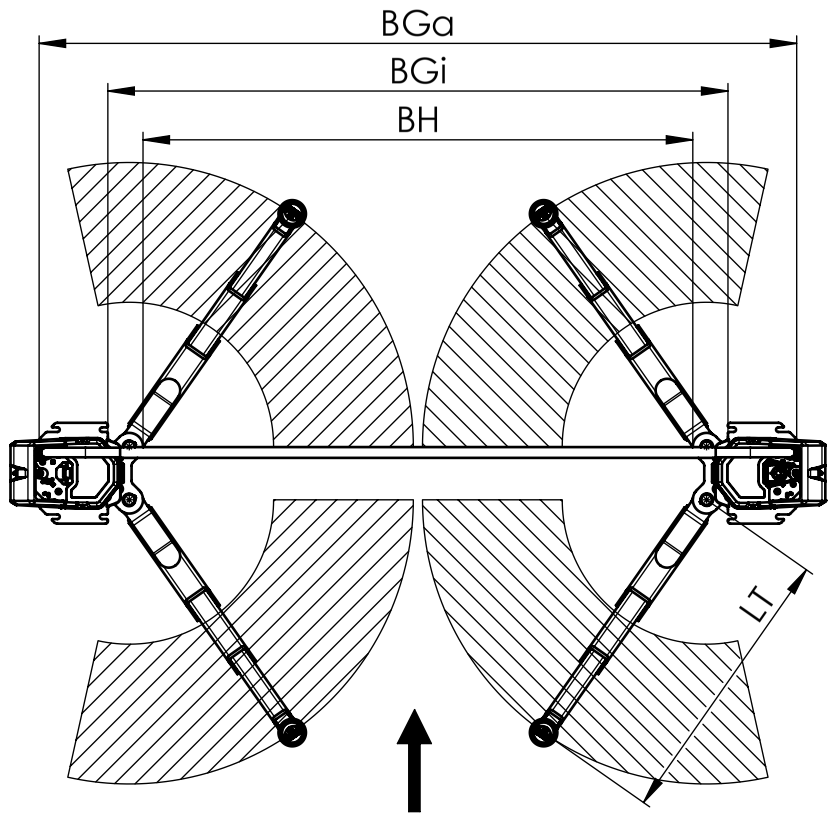

technical data

VP 251231 / VP 251233		MA STAR 3.5 S
total height	HG	4499mm**
total width	BG	3557mm*
clear height	HL	4452mm**
column height	HS	2943mm**
vertical travel	HW	1885mm
length of stroke max.	HO	1995mm**
pivoting height min.	HU	100mm**
adjusting range of support disk	HT	80mm-110mm**
extension length of support arm	LT	630mm-1240mm
pivoting range of support arm		102,5°
column clearance	BL	2697mm*
outer column width	BA	3097mm*
baseplate overlap	BP	105mm
outer width of baseplate	BGa	3307mm*
inner width of baseplate	BGi	2707mm*
drive-through clearance	BH	2400mm (2200mm-2400mm)
load capacity		3500kg
operating temperature		+5...+40°C
dead weight (incl. packaging)		635kg (725kg)
packaging dimension (L x W x H)		2900mm x 1100mm x 710mm
anchorage		HILTI HIT-HY 200-A + HAS-U 5.8 M16
concrete quality		min. C20/25 (DIN EN 1992)
rated capacity		2 x 3.0 kW (S3-20%)
power supply	50Hz	3x400V +N +PE; C16A + RCD (30mA)
		3x220-230V +N +PE; C25A + RCD (30mA) (VZ 990492)
	60Hz	3x380-400V +N +PE; C16A + RCD (30mA) (VZ 990491)
		3x220-230V +N +PE; C25A + RCD (30mA) (VZ 990499)
air supply *(provided by the customer)*	8 bar	max. available flow rate at 6 bar working pressure
		100 l/min (VZ 990488/VZ 990489)
		300 l/min (VZ 990500/VZ 990501)
lifting time		40s

* Dimensions refer to recommended drive-through clearance BH = 2400mm
Attention: Using VZ 971607 (door strike protection) the drive-through clearance is reduced by 35mm

** Using VZ 971603 (mounting plates for reduced foundation thickness)
the marked dimensions increase by 20mm

Schutzvermerk beachten nach DIN ISO 16016	Maßstab 1:33		Materialnummer 1400028	Revision 03	
	Konfigurationstyp		Dokumenttyp Hauptzeichnung	Änderungsnr. 100306	Büro 300
MAHAGROUP	Benennung **MA STAR 3.5 S - Product Datasheet**				
	Dokumentnummer **F4773**		Version **D**	A3	Blatt / von
Datum, Ersteller 30.8.2022 MKRAUS	Datum, Prüfer 31.08.2022 MKRAUS	Datum, Freigabe 01.09.2022 MKRAUS	alte Materialnummer		

SWG/10000038/DE/D

MAHA MKRAUS 01.09.2022 12:54:16

MA STAR triple safety *****

MA STAR 3.5 S (VP 251231 / VP 251233)

Attention:
The quality of the foundation plate has to be checked by the client prior to installation!

All dimension in m
All dimensions have to be checked on site
In case of ductwork, use max. 45° bends

Supply line in-ground	Supply line via ceiling
Install ductwork for cables Ø50mm, Insert the cable with an overlap of approx. 4m. Place the cable at the right column!	Place the cable at the right column. Connection by CEE-plug device 16A 5p 6h. Must be prepared and certified beforehand!

Attention:
All highlighted dimensions refer to the recommended drive through clearance of 2,40m! (see technical datasheet)

Supply line:
3x400V +N +PE; C16A + RCD (30mA); rated power 2x3,0kW
min. cross-sectional area of supply line 5x2,5 mm2

Connection of columns left-right via cable brigde prepared for optional in-ground wiring

The electrical connection of the Energy-Kit must be prepard on site.
Connection by Schuko plug device (1x230V, 16A + RCD(30mA)) at the corresponding column.
The power line and plug device must be prepared and certified beforehand!
In case of compressed air supply, a pneumatic hose Ø9mm has to be placed at the corresponding column (air supply 8 bar).

The locally applicable regulations and standards must be fullfilled for all electrical installations!

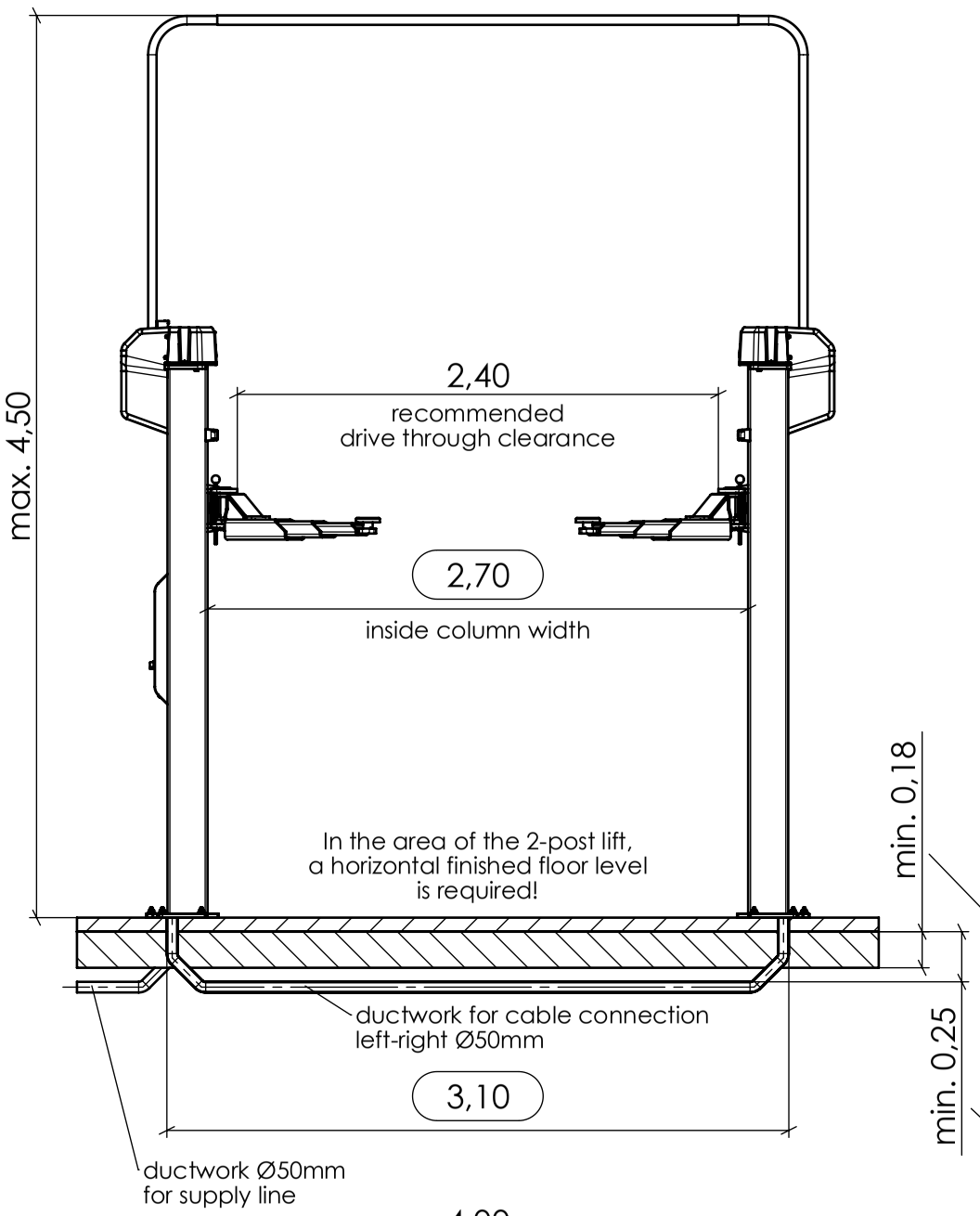

foundation raft
concrete depth without screed min. 180mm
concrete quality
min. C20/25 (DIN EN 1992)
concrete reinforcement:
top and bottom

depth of ductwork

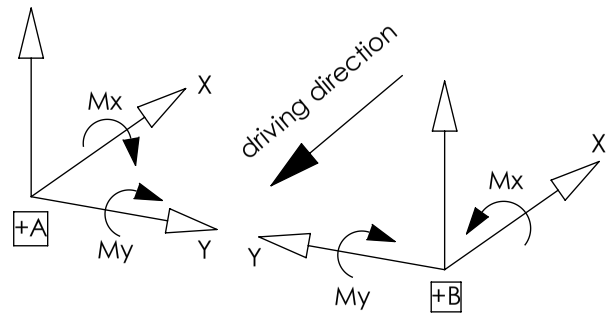

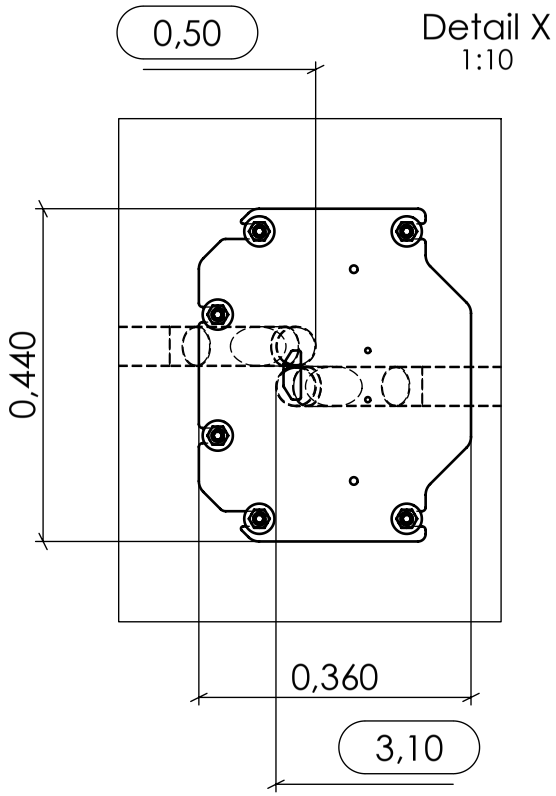

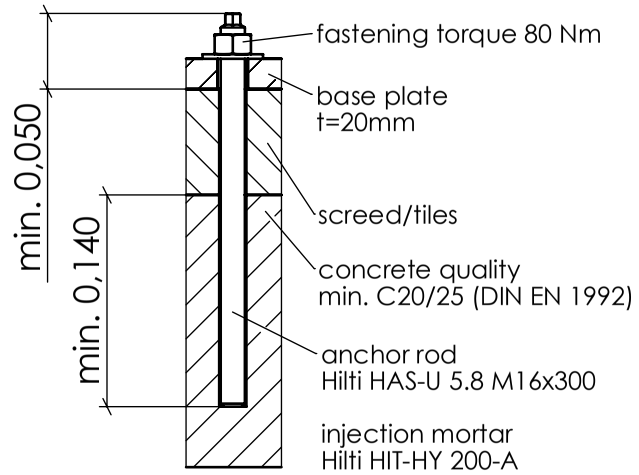

Attention:
The installation material VM 999080 is only certified for max. 100mm height of floor construction (screed/tiles)
The standard installation material can not be used for higher floor constructions!
(Please notify before installation)

Type	max. load (N)		max. torque (Nm) per column	
	dead weight of lift (N)	rated capacity (N)	Mx	My
MA STAR 3.5 S	6.400	35.000	19.480	10.840
calculation of load according to EN 1493:2010 without consideration of safety factors				

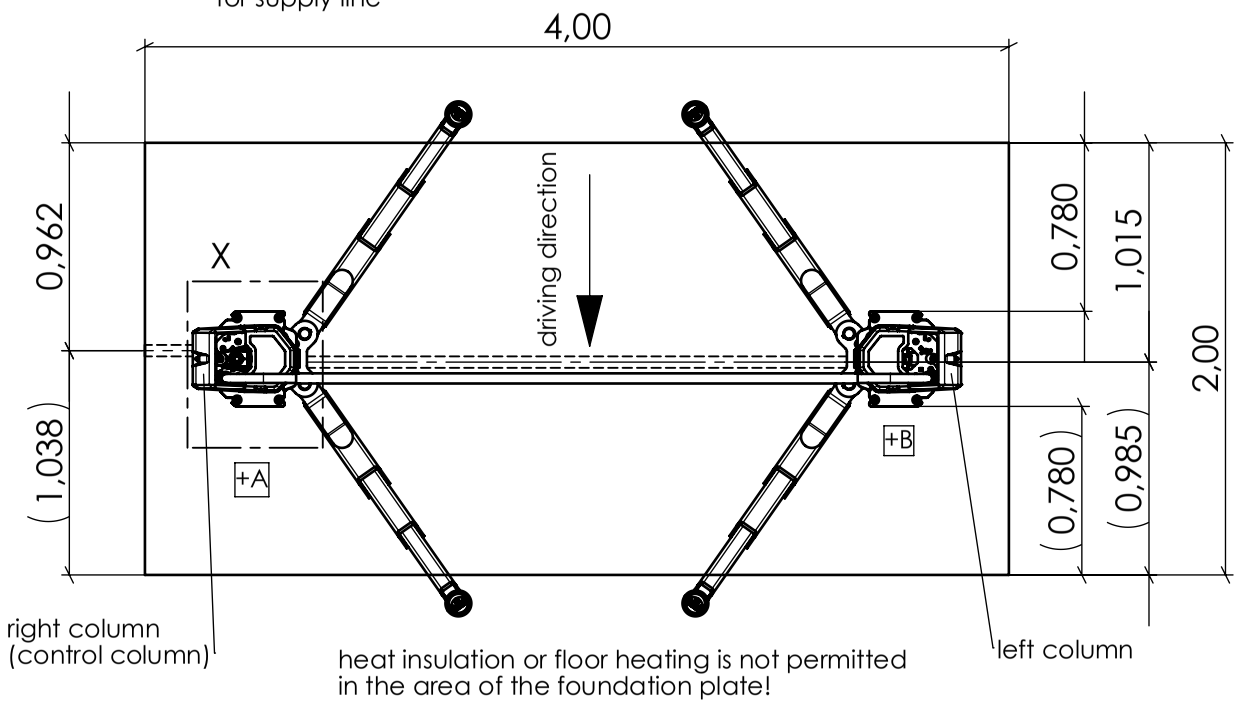

Schutzvermerk beachten nach DIN ISO 16016	Maßstab 1:35	Materialnummer 1402125	Revision 04	
	Konfigurationstyp Fundamentplan	Dokumenttyp	Änderungsnr. 100427	Büro 300
MAHAGROUP	Benennung **MA STAR 3.5 S - foundation plan**			
	Dokumentnummer **F4774**	Version **E**	A3	Blatt 1 / von 1
Datum, Ersteller 11.5.2022 MKRAUS	Datum, Prüfer 24.05.2022 MKRAUS	Datum, Freigabe 25.05.2022 MKRAUS	alte Materialnummer	

MA STAR triple safety *****

MA STAR 3.5 S on mounting plate (VZ 971603)

Attention:
The quality of the foundation plate has to be checked by the client prior to installation!

All dimension in m
All dimensions have to be checked on site
In case of ductwork, use max. 45° bends

Supply line in-ground	Supply line via ceiling
Install ductwork for cables Ø50mm, Insert the cable with an overlap of approx. 4m. Place the cable at the right column!	Place the cable at the right column. Connection by CEE-plug device 16A 5p 6h. Must be prepared and certified beforehand!

Attention:
All highlighted dimensions refer to the recommended drive through clearance of 2,40m! (see technical datasheet)

Supply line:
3x400V +N +PE; C16A + RCD (30mA); rated power 2x3,0kW
min. cross-sectional area of supply line 5x2,5 mm2

Connection of columns left-right via cable brigde prepared for optional in-ground wiring

The electrical connection of the Energy-Kit must be prepard on site.
Connection by Schuko plug device (1x230V, 16A + RCD(30mA)) at the corresponding column.
The power line and plug device must be prepared and certified beforehand!
In case of compressed air supply, a pneumatic hose Ø9mm has to be placed at the corresponding column (air supply 8 bar).

The locally applicable regulations and standards must be fullfilled for all electrical installations!

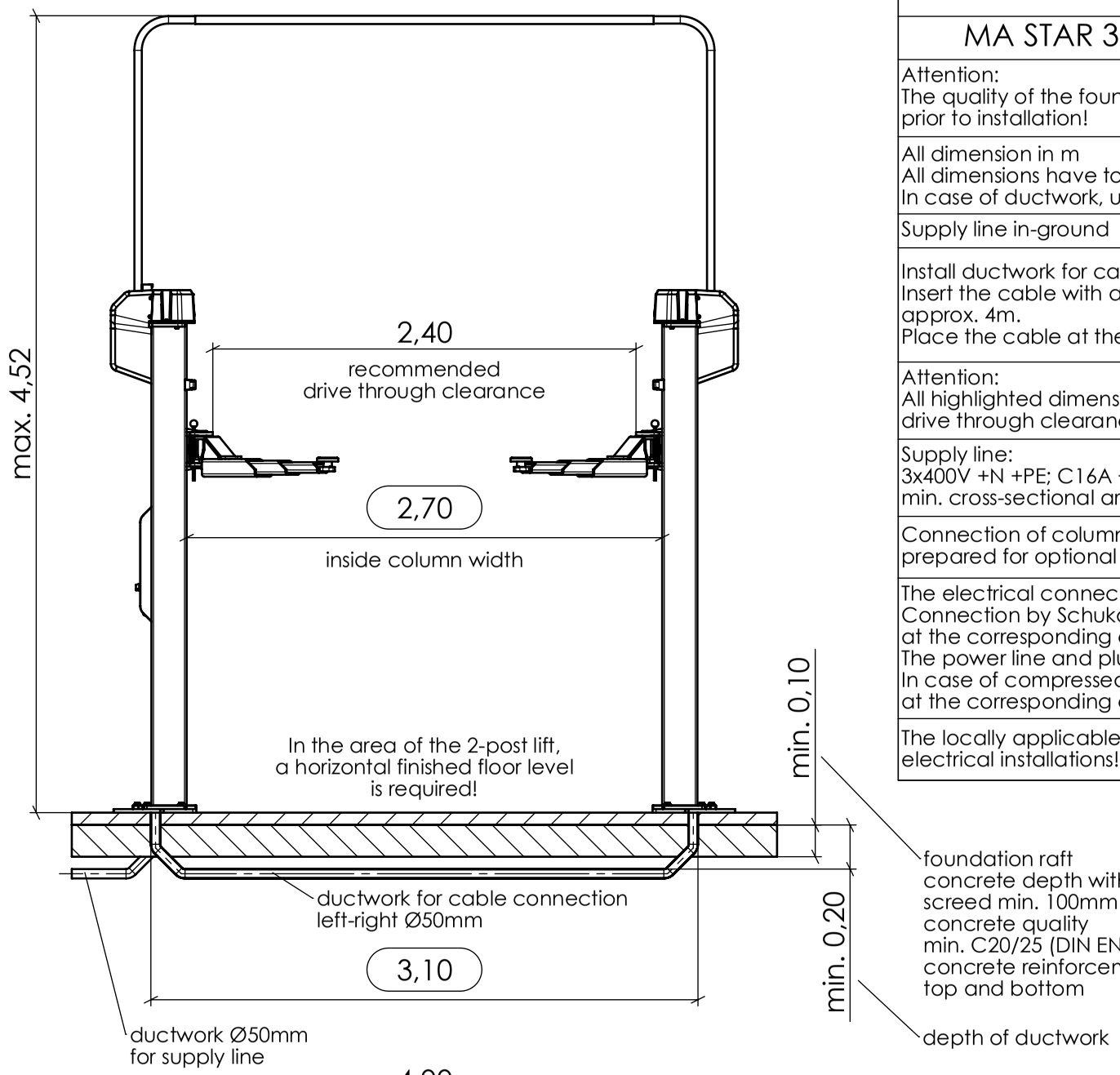

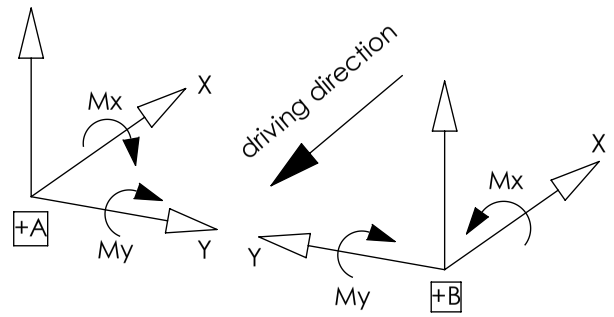

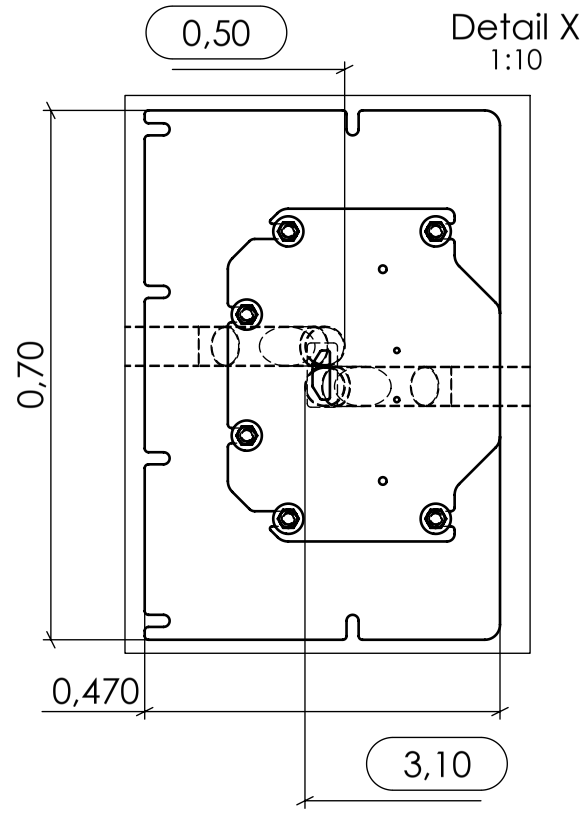

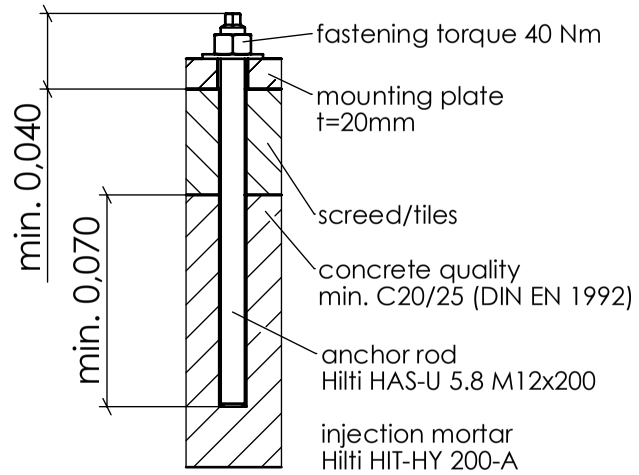

Attention:
The installation material VM 999054 is only certified for max. 90mm height of floor construction (screed/tiles)
The standard installation material can not be used for higher floor constructions!
(Please notify before installation)

Type	max. load (N)		max. torque (Nm) per column	
	dead weight of lift (N)	rated capacity (N)	Mx	My
MA STAR 3.5 S	6.400	35.000	19.480	10.840
calculation of load according to EN 1493:2010 without consideration of safety factors				

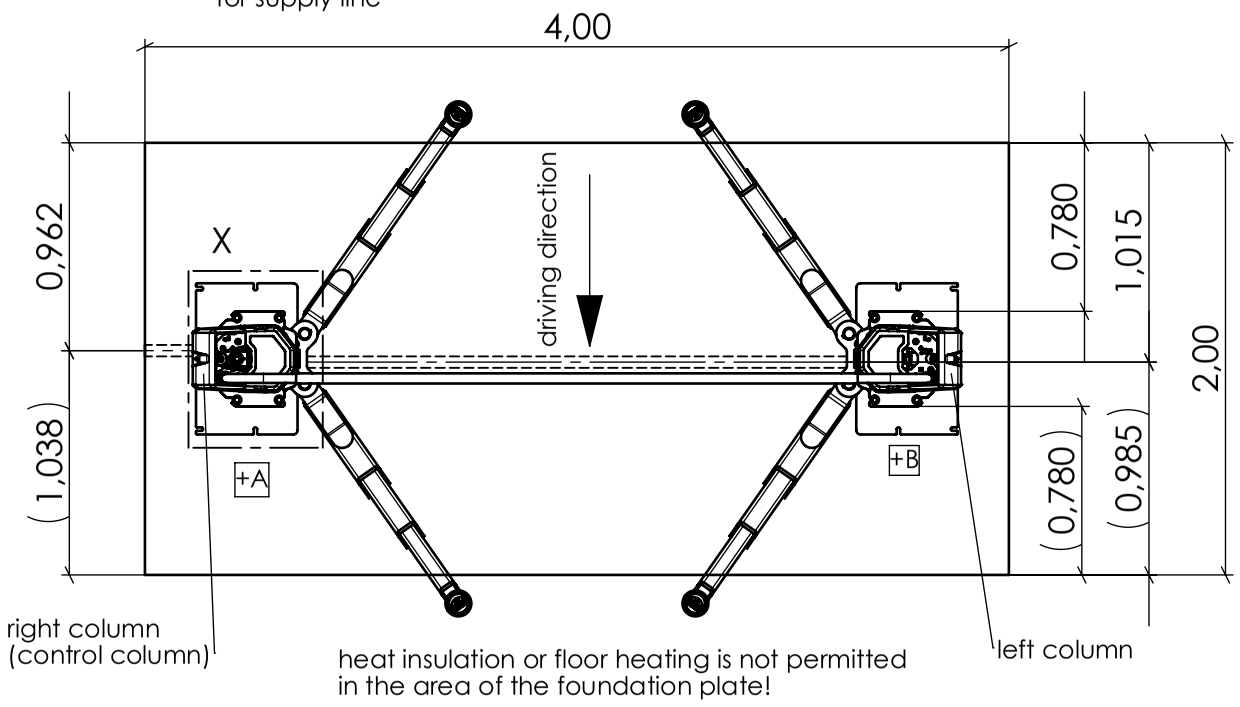

Schutzvermerk beachten nach DIN ISO 16016	Maßstab 1:35	Materialnummer 1402125	Revision 04
	Konfigurationstyp Fundamentplan	Dokumenttyp	Änderungsnr. 100427 / Büro 300
MAHAGROUP	Benennung **MA STAR 3.5 S with mounting plates - foundation plan**		
	Dokumentnummer **F4775**	Version **E** / A3	Blatt 1 / von 1
Datum, Ersteller 11.5.2022 MKRAUS	Datum, Prüfer 24.05.2022 MKRAUS	Datum, Freigabe 25.05.2022 MKRAUS	alte Materialnummer

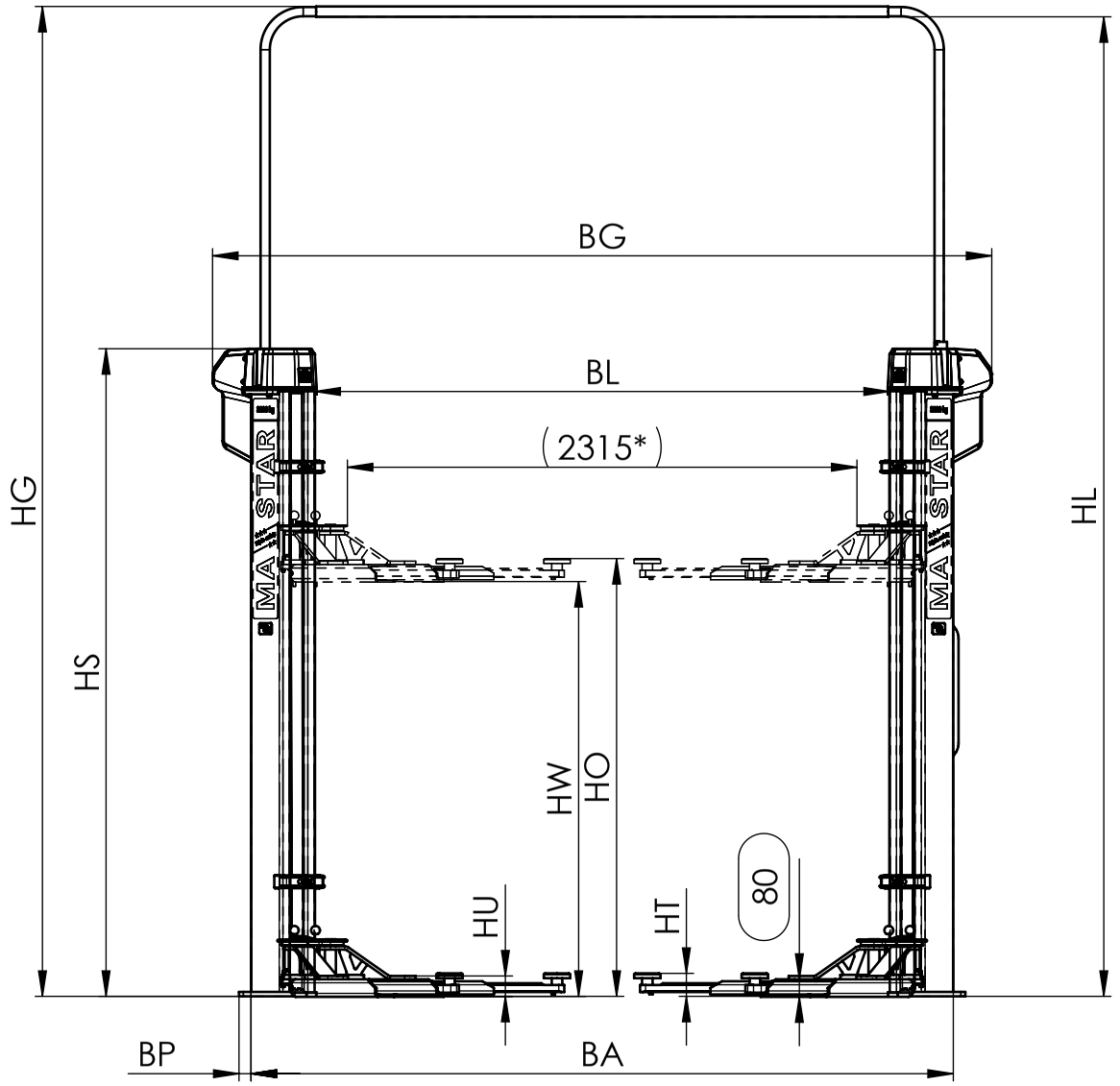

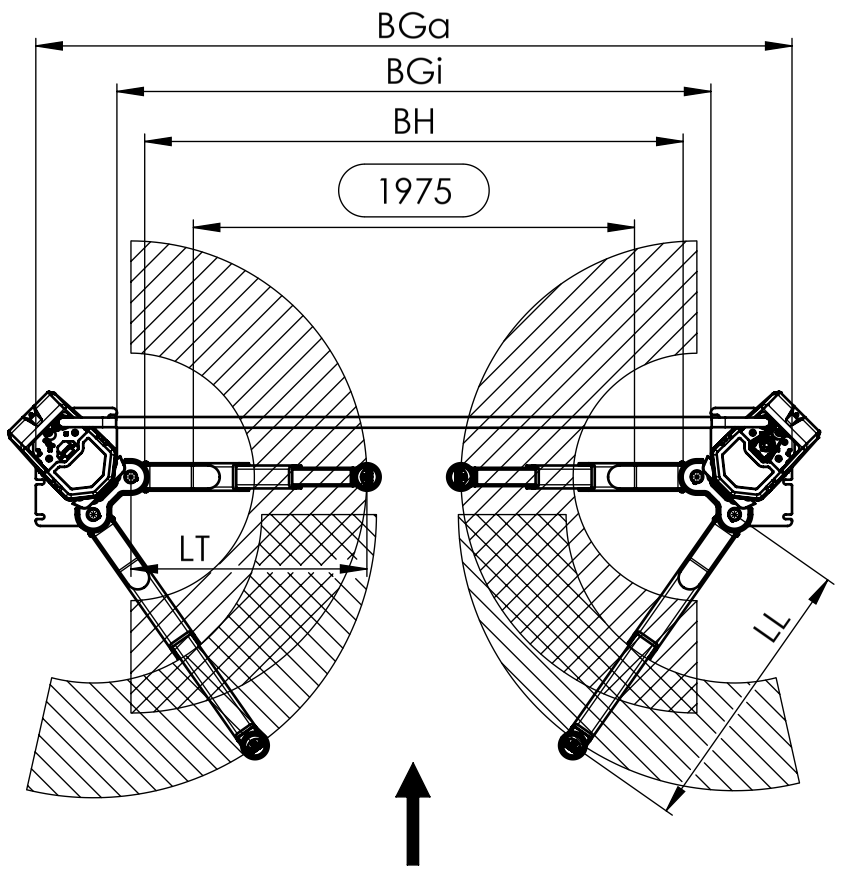

technical data

VP 251234		MA STAR 3.5 A BMW
total height	HG	4499mm**
total width	BG	3542mm
clear height	HL	4452mm**
column height	HS	2943mm**
vertical travel	HW	1885mm
length of stroke max.	HO	1995mm**
pivoting height min.	HU	80mm**
adjusting range of support disk	HT	80mm-110mm**
extension length of short support arm	LT	540mm-1030mm
pivoting range of short support arm		180°
extension length of long support arm	LL	760mm-1230mm
pivoting range of long support arm		102,5°
column clearance	BL	2610mm
outer column width	BA	3192mm
baseplate overlap	BP	55mm
outer width of baseplate	BGa	3301mm
inner width of baseplate	BGi	2593mm
drive-through clearance	BH	2350mm (2315mm*)
load capacity		3500kg
operating temperature		+5...+40°C
dead weight (incl. packaging)		650kg (740kg)
packaging dimension (L x W x H)		2900mm x 1100mm x 710mm
anchorage		HILTI HIT-HY 200-A + HAS-U 5.8 M16
concrete quality		min. C20/25 (DIN EN 1992)
rated capacity		2 x 3.0 kW (S3-20%)
power supply	50Hz	3x400V +N +PE; C16A + RCD (30mA)
		3x220-230V +N +PE; C25A + RCD (30mA) (VZ 990492)
	60Hz	3x380-400V +N +PE; C16A + RCD (30mA) (VZ 990491)
		3x220-230V +N +PE; C25A + RCD (30mA) (VZ 990499)
air supply *(provided by the customer)*	8 bar	max. available flow rate at 6 bar working pressure
		100 l/min (VZ 990488/VZ 990489)
		300 l/min (VZ 990500/VZ 990501)
lifting time		40s

* Using VZ 971607 (door strike protection) the drive-through clearance is reduced to 2315mm

** Using VZ 971594 (mounting plates for reduced foundation thickness) the marked dimensions increase by 20mm

Schutzvermerk beachten nach DIN ISO 16016	Maßstab 1:33	Materialnummer 1400028	Revision 03	
	Konfigurationstyp	Dokumenttyp Hauptzeichnung	Änderungsnr. 100306	Büro 300
MAHAGROUP	Benennung **MA STAR 3.5 BMW - Product Datasheet**			
	Dokumentnummer **F4776**	Version **D**	A3	Blatt / von
Datum, Ersteller 30.8.2022 MKRAUS	Datum, Prüfer 31.08.2022 MKRAUS	Datum, Freigabe 01.09.2022 MKRAUS	alte Materialnummer	

SWG/10000038/DE/D

MAHA MKRAUS 01.09.2022 12:54:16

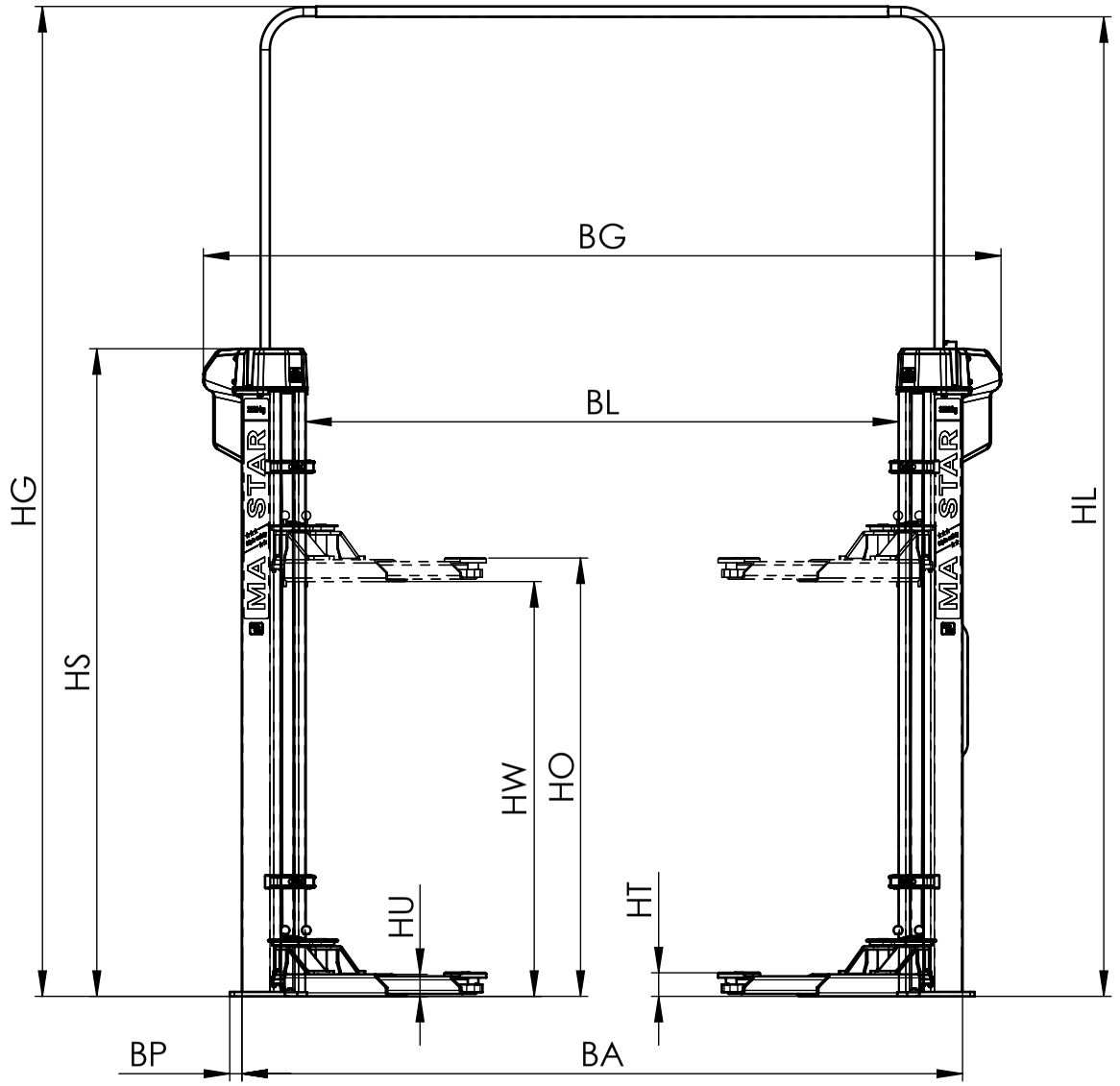

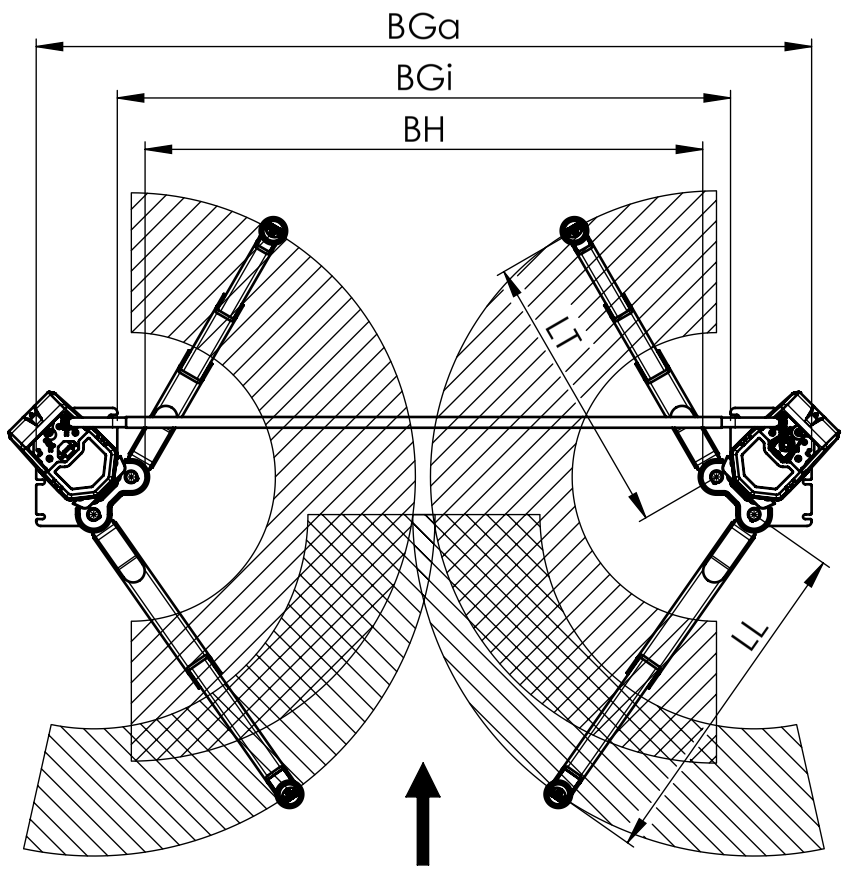

technical data

VP 251235		MA STAR 3.5 A MB
total height	HG	4499mm**
total width	BG	3627mm
clear height	HL	4452mm**
column height	HS	2943mm**
vertical travel	HW	1885mm
length of stroke max.	HO	1995mm**
pivoting height min.	HU	100mm** (80mm***)
adjusting range of support disk	HT	80mm-110mm**
extension length of short support arm	LT	630mm-1240mm
pivoting range of short support arm		180°
extension length of long support arm	LL	920mm-1490mm
pivoting range of long support arm		102,5°
column clearance	BL	2695mm
outer column width	BA	3277mm
baseplate overlap	BP	55mm
outer width of baseplate	BGa	3386mm
inner width of baseplate	BGi	2678mm
drive-through clearance	BH	2435mm (2400mm*)
load capacity		3500kg
operating temperature		+5...+40°C
dead weight (incl. packaging)		650kg (740kg)
packaging dimension (L x W x H)		2900mm x 1100mm x 710mm
anchorage		HILTI HIT-HY 200-A + HAS-U 5.8 M16
concrete quality		min. C20/25 (DIN EN 1992)
rated capacity		2 x 3.0 kW (S3-20%)
power supply	50Hz	3x400V +N +PE; C16A + RCD (30mA)
		3x220-230V +N +PE; C25A + RCD (30mA) (VZ 990492)
	60Hz	3x380-400V +N +PE; C16A + RCD (30mA) (VZ 990491)
		3x220-230V +N +PE; C25A + RCD (30mA) (VZ 990499)
air supply *(provided by the customer)*	8 bar	max. available flow rate at 6 bar working pressure
		100 l/min (VZ 990488/VZ 990489)
		300 l/min (VZ 990500/VZ 990501)
lifting time		40s

* Using VZ 971607 (door strike protection) the drive-through clearance is reduced to 2400mm

** Using VZ 971594 (mounting plates for reduced foundation thickness) the marked dimensions increase by 20mm

*** pivoting height for VZ 971459 (supports arms for sports cars)

Schutzvermerk beachten nach DIN ISO 16016	Maßstab 1:33	Materialnummer 1400028	Revision 03		
	Konfigurationstyp	Dokumenttyp Hauptzeichnung	Änderungsnr. 100306	Büro 300	
MAHAGROUP	Benennung **MA STAR 3.5 MB - Product Datasheet**				
	Dokumentnummer **F4778**		Version **D**	A3	Blatt / von
Datum, Ersteller 30.8.2022 MKRAUS	Datum, Prüfer 31.08.2022 MKRAUS	Datum, Freigabe 01.09.2022 MKRAUS	alte Materialnummer		

SWG/10000038/DE/D

MAHA MKRAUS 01.09.2022 12:54:16

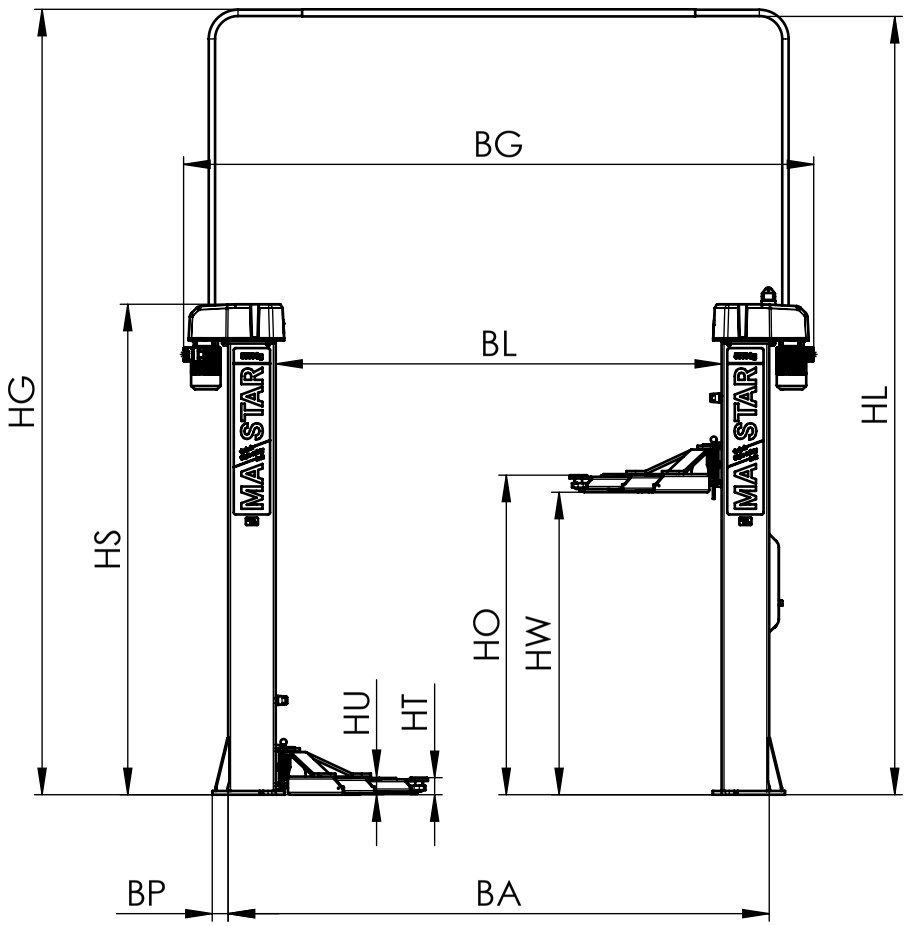

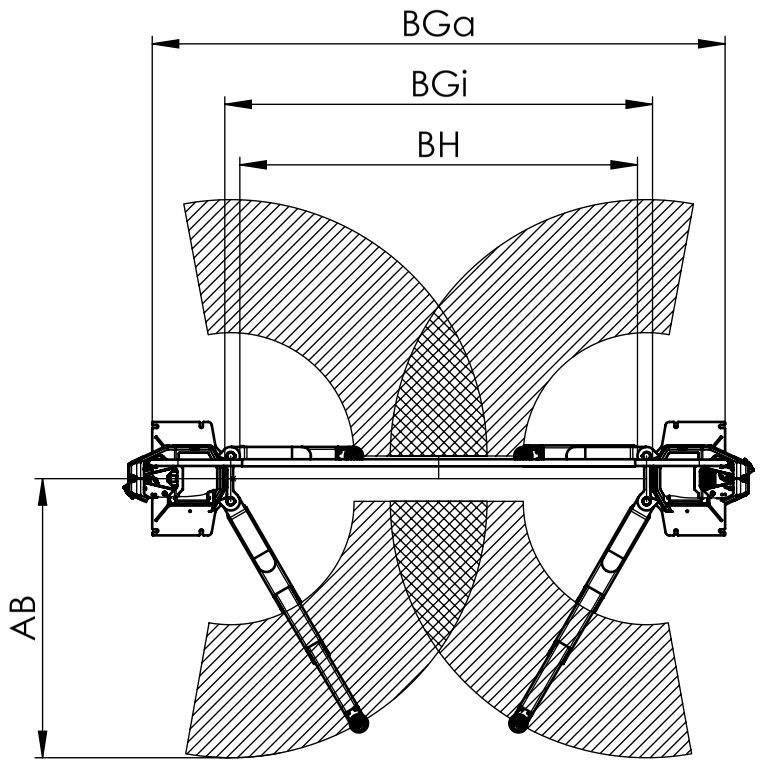

technical data

VP 451186/VP451187		MA STAR 5.5
Installation width		standard (F4790)
total height	HG	5193 mm
total width	BG	4200 mm*
clear height	HL	5146 mm
column height	HS	3243 mm
vertical travel	HW	1950 mm
length of stroke max.	HO	2065 mm
pivoting height min.	HU	120 mm
adjusting range of support disk	HT	85 mm - 115 mm
pivoting range of support arm		100°
support range	AB	965 - 1845 mm
column clearance	BL	2949 mm*
outer column width	BA	3579 mm*
baseplate overlap	BP	105 mm
outer width of baseplate	BGa	3789 mm*
inner width of baseplate	BGi	2829 mm*
drive-through clearance	BH	2630 mm (2530 mm - 2780 mm)
load capacity		5500 kg
operating temperature		+5...+40 °C
dead weight (incl. packaging)		1320 kg (1525 kg)
packaging dimension (L x W x H)		two packages á 3175 mm x 760 mm x 960 mm
anchorage		HILTI HIT-HY 200-A + HAS-U 5.8 M16
concrete quality		min. C20/25 (DIN EN 1992)
rated capacity		2 x 4.0 kW (S3-20 %)
power supply	50 Hz	3x 400 V +N +PE; C32A + RCD (30 mA)
air supply *(provided by the customer)*	8 bar	max. available flow rate at 6 bar working pressure
		100 l/min (VZ 990488/VZ 990489)
		300 l/min (VZ 990500/VZ 990501)
lifting time		ca. 40/40 s

* Dimensions refer to drive-through clearance BH = 2630 mm

Schutzvermerk beachten nach DIN ISO 16016	Maßstab 1:50	Materialnummer 1401261	Revision 05
	Konfigurationstyp	Dokumenttyp	Änderungsnr. 100863 / Büro 300
MAHA GROUP	Benennung **MA STAR 5.5 - Product Datasheet**		
	Dokumentnummer **F4790**	Version **H** / A3	Blatt 1 / von 3
Datum, Ersteller 1.9.2022 MKRAUS	Datum, Prüfer 01.09.2022 MKRAUS	Datum, Freigabe 01.09.2022 MKRAUS	alte Materialnummer

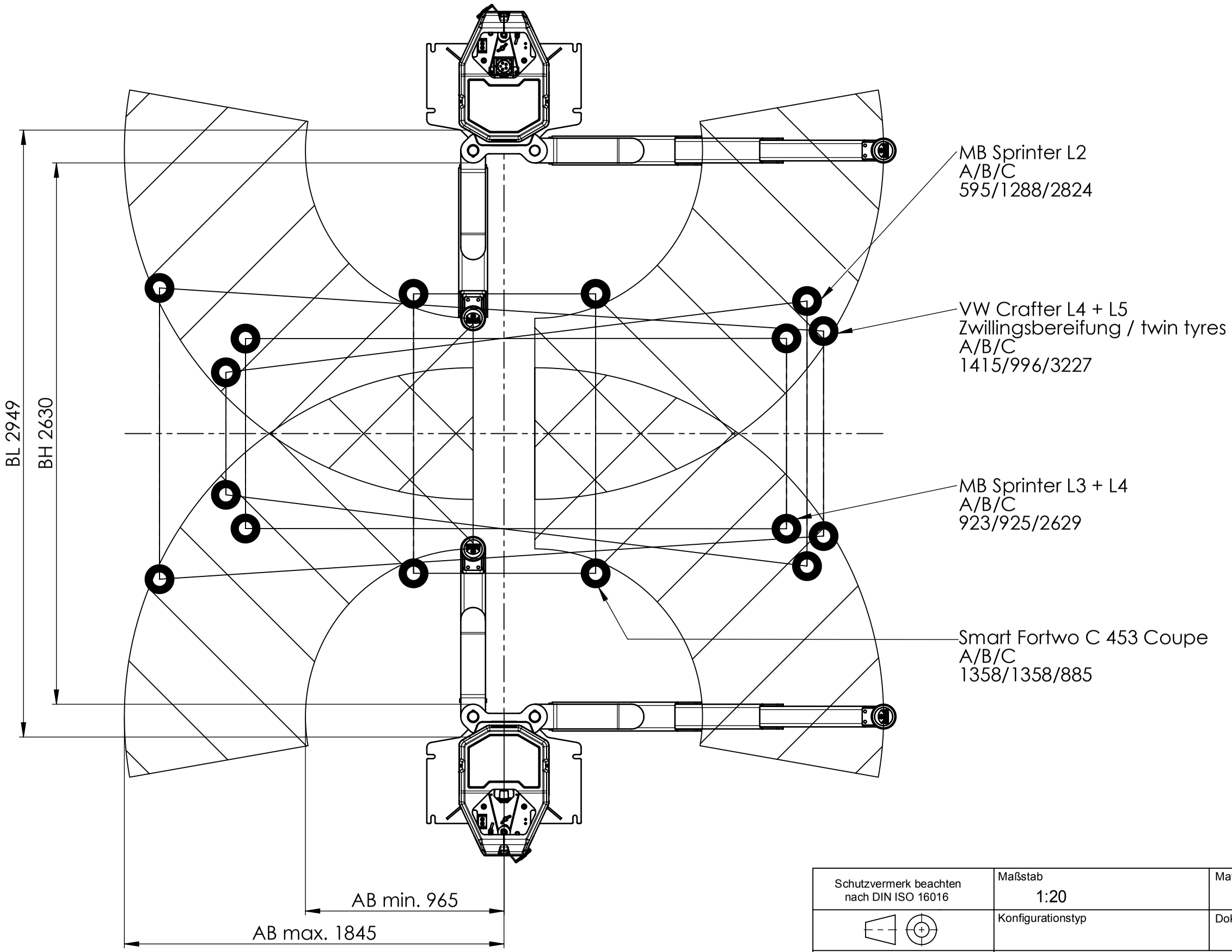

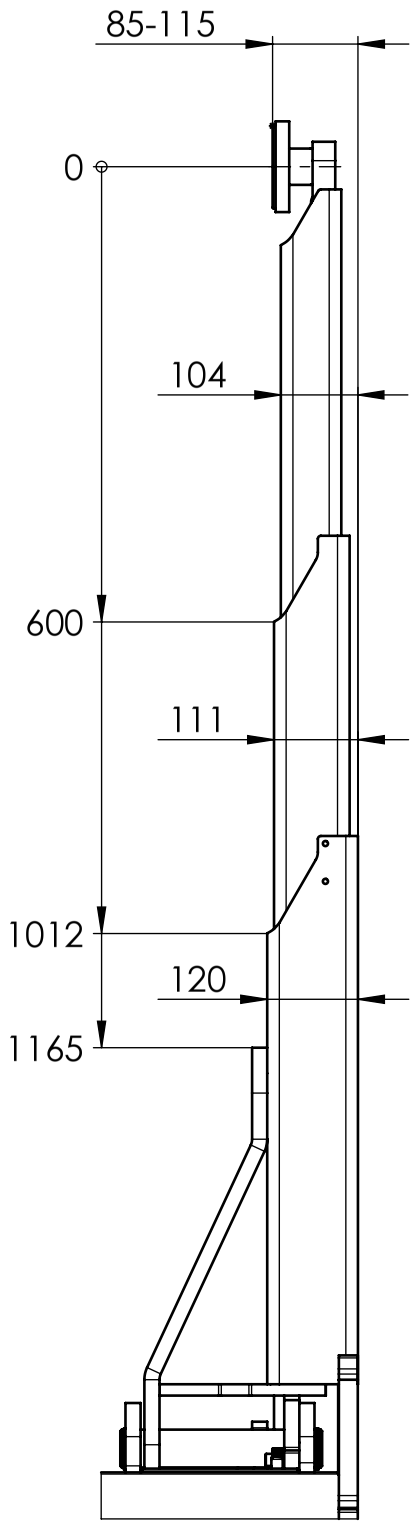

Schutzvermerk beachten nach DIN ISO 16016	Maßstab 1:20	Materialnummer 1401261	Revision 03
	Konfigurationstyp	Dokumenttyp	Änderungsnr. 100552 / Büro 300
MAHAGROUP	Benennung **MA STAR 5.5 - Aufnahmebereich / support range**		
	Dokumentnummer **F4790**	Version -- / A3	Blatt 2 von 3
Datum, Ersteller 16.3.2021 MKRAUS	Datum, Prüfer 22.03.2021 MKRAUS	Datum, Freigabe 22.03.2021 MKRAUS	alte Materialnummer

SWG/10025993/DE/--

MAHA MKRAUS 22.03.2021 17:03:56

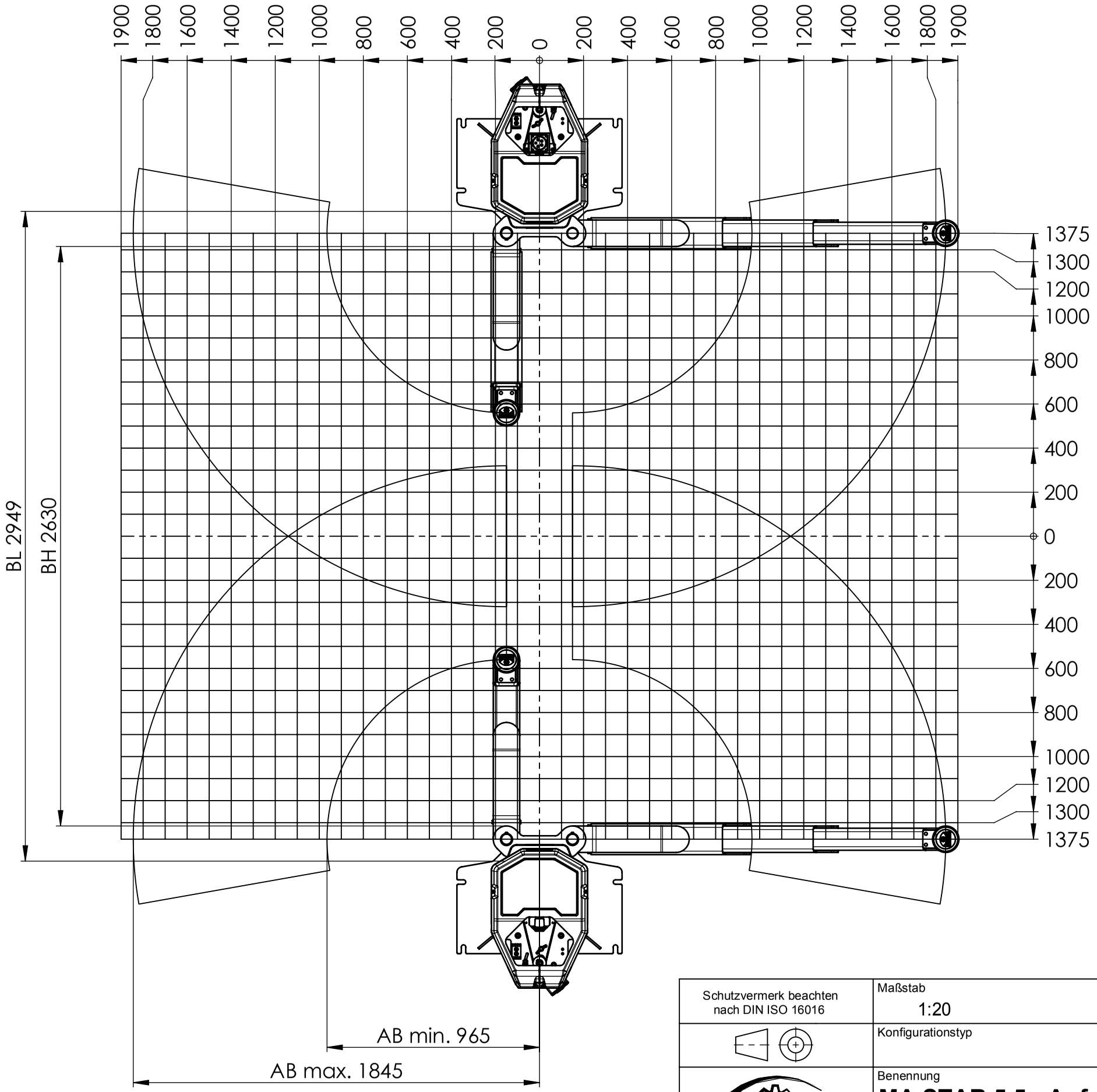

Schutzvermerk beachten nach DIN ISO 16016	Maßstab 1:20	Materialnummer 1401261	Revision 03
	Konfigurationstyp	Dokumenttyp	Änderungsnr. 100552 / Büro 300
MAHAGROUP	Benennung **MA STAR 5.5 - Aufnahmebereich / support range**		
	Dokumentnummer **F4790**	Version -- / A3	Blatt 3 / von 3
Datum, Ersteller 16.3.2021 MKRAUS	Datum, Prüfer 22.03.2021 MKRAUS	Datum, Freigabe 22.03.2021 MKRAUS	alte Materialnummer

MA STAR triple safety *****

MA STAR 5.5 (VP 451186 / VP 451187)

Attention:
The quality of the foundation plate has to be checked by the client prior to installation!

All dimension in m
All dimensions have to be checked on site
In case of ductwork, use max. 45° bends

Supply line in-ground	Supply line via ceiling
Install ductwork for cables Ø50mm, Insert the cable with an overlap of approx. 4m. Place the cable at the right column!	Place the cable at the right column. Connection by CEE-plug device 32A 5p 6h. Must be prepared and certified beforehand!

Attention:
All highlighted dimensions refer to the recommended drive through clearance of 2,63m! (see technical datasheet)

Supply line:
3x400V +N +PE; C32A + RCD (30mA); rated power 2x4,0kW
min. cross-sectional area of supply line 5x2,5 mm2

Connection of columns left-right via cable brigde prepared for optional in-ground wiring

The electrical connection of the Energy-Kit must be prepard on site.
Connection by Schuko plug device (1x230V, 16A + RCD(30mA)) at the corresponding column.
The power line and plug device must be prepared and certified beforehand!
In case of compressed air supply, a pneumatic hose Ø9mm has to be placed at the corresponding column (air supply 8bar).

The locally applicable regulations and standards must be fullfilled for all electrical installations!

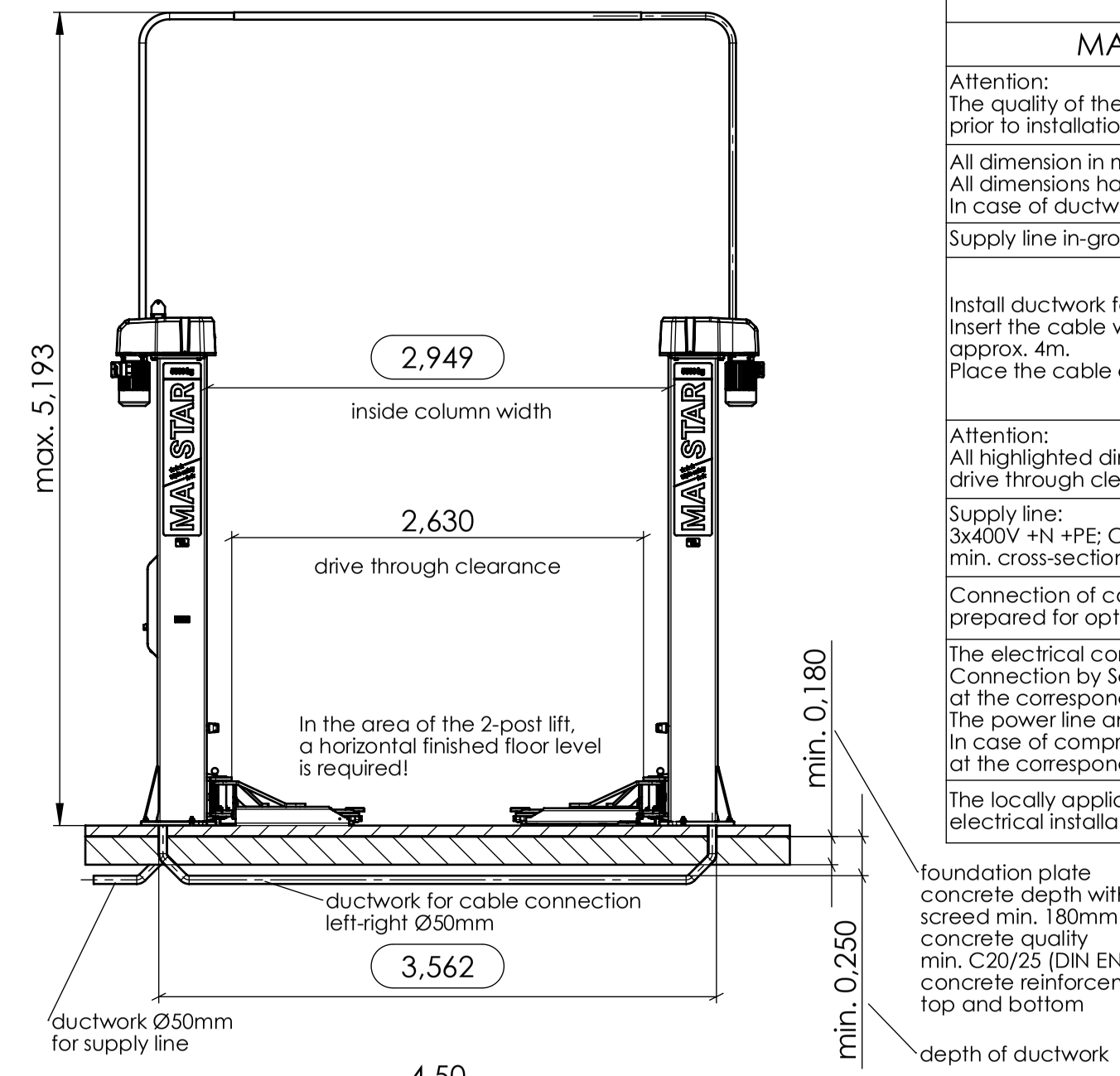

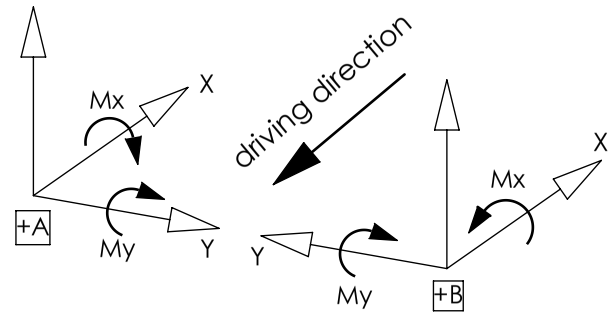

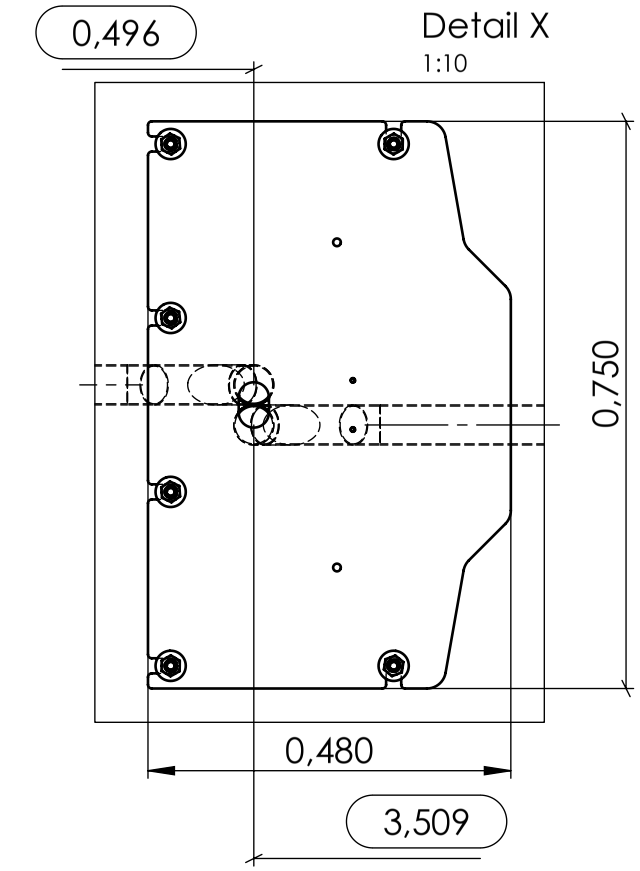

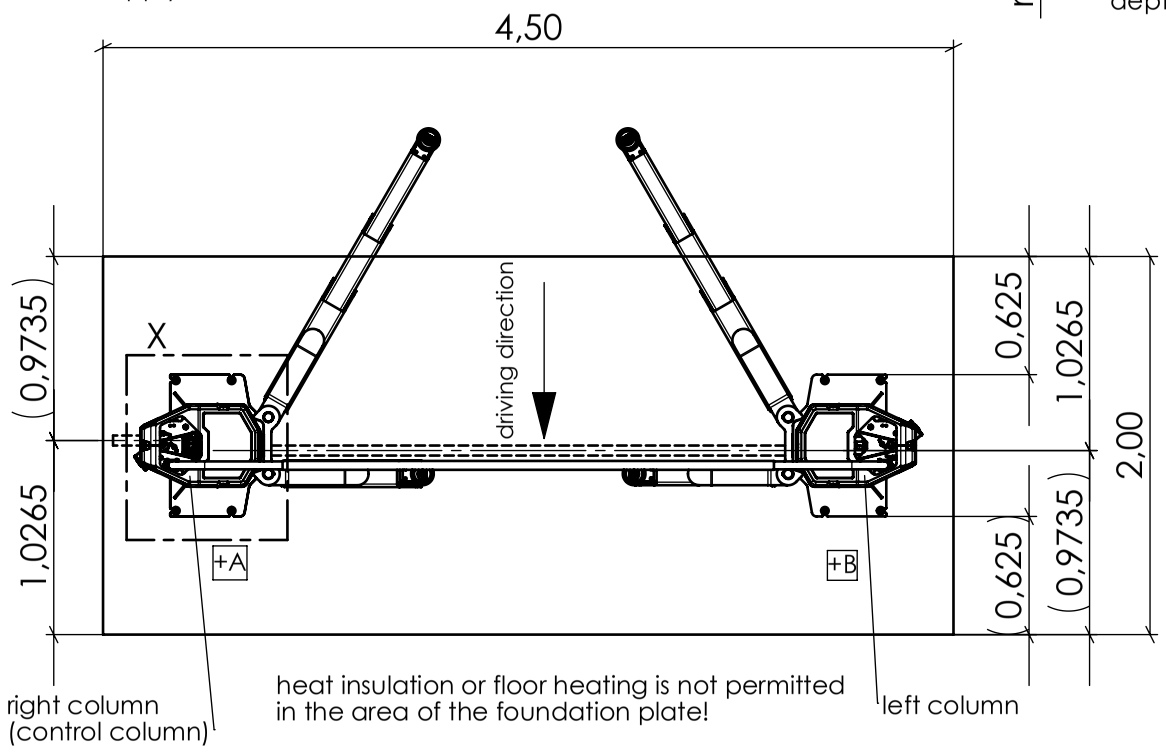

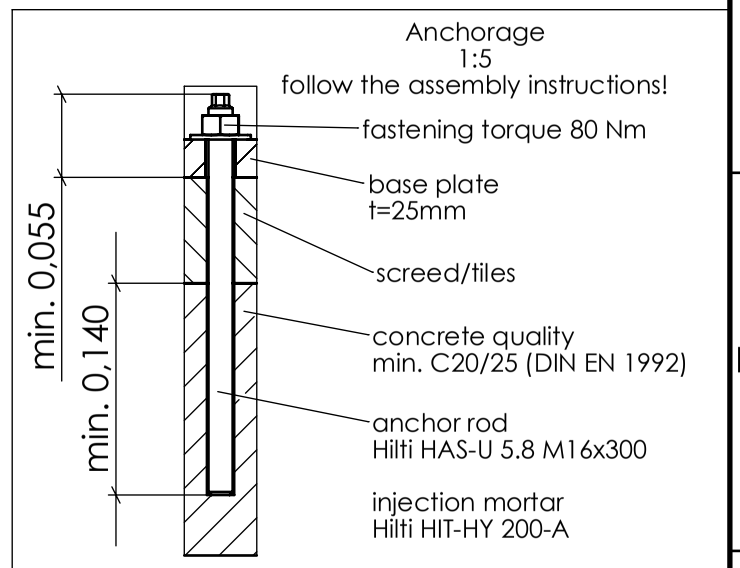

Attention:
The installation material VM 999079 is only certified for max. 100mm height of floor construction (screed/tiles)
The standard installation material can not be used for higher floor constructions!
(Please notify before installation)

Type	max. load (N)		max. torque (Nm) per column	
	dead weight of lift (N)	rated capacity (N)	Mx	My
MA STAR 5.5	13.100	55.000	36.680	36.590

calculation of load according to EN 1493:2010 without consideration of safety factors

Schutzvermerk beachten nach DIN ISO 16016	Maßstab 1:40	Materialnummer 1404750	Revision 01
	Konfigurationstyp Fundamentplan	Dokumenttyp	Änderungsnr. 100659 / Büro 300
MAHA GROUP	Benennung **MA STAR 5.5 - foundation plan standard**		
	Dokumentnummer **F4791**	Version **B** / A3	Blatt 1 / von 1
Datum, Ersteller 23.3.2021 MKRAUS	Datum, Prüfer 23.03.2021 MKRAUS	Datum, Freigabe 24.03.2021 KBRENNER	alte Materialnummer

SWG/10021366/DE/B

MAHA MKRAUS 24.03.2021 10:58:20

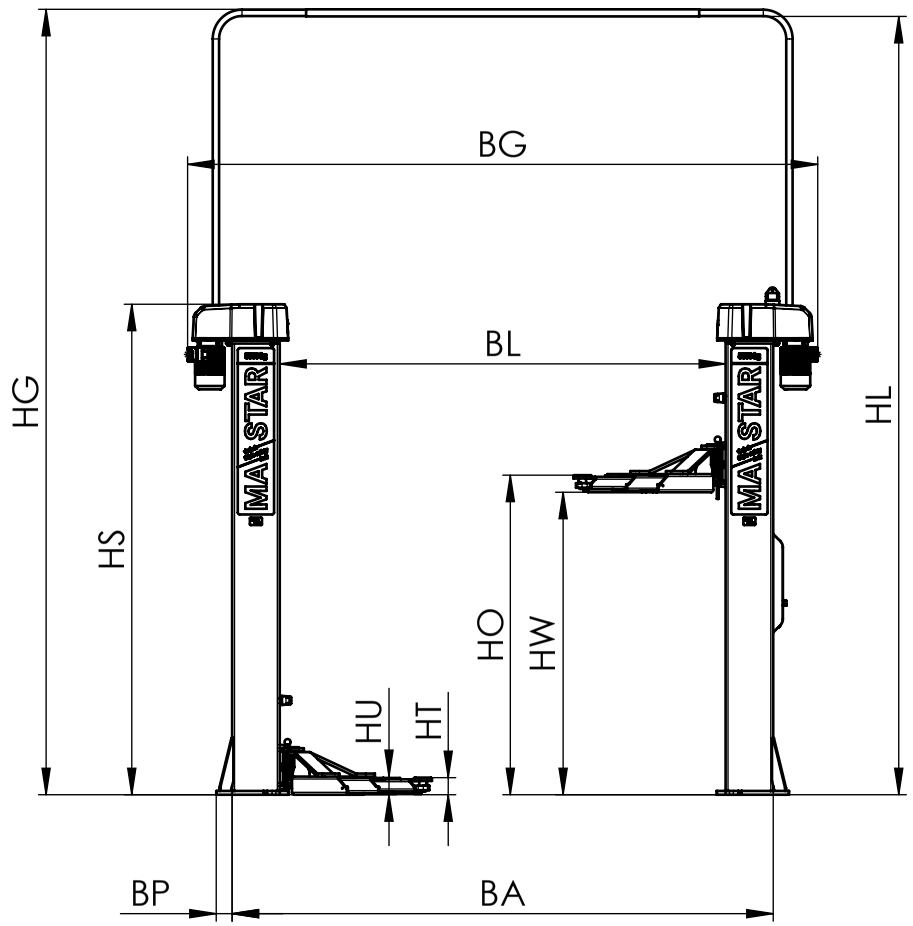

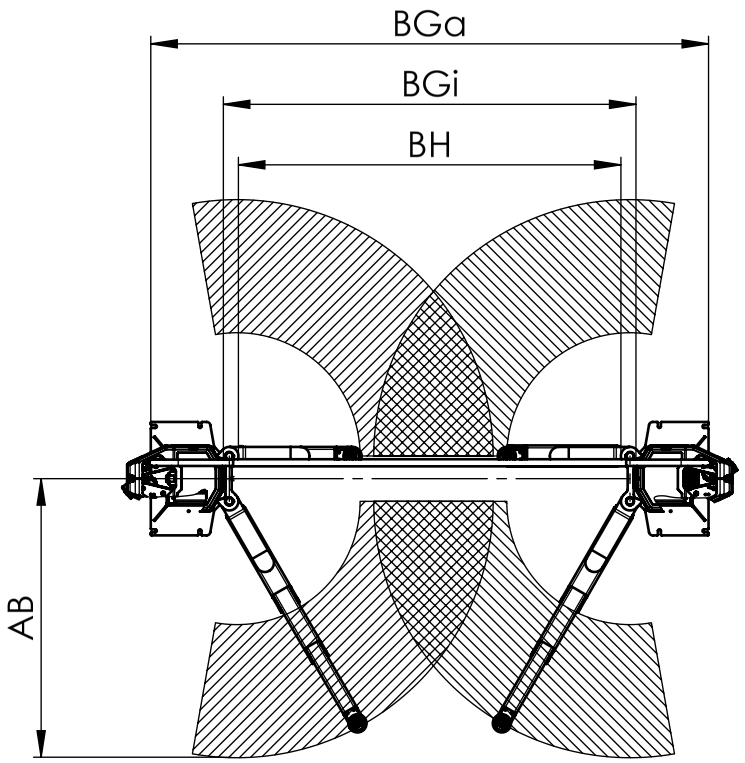

technical data

VP 451186/VP451187		MA STAR 5.5
Installation width		narrow (F4792) recommended for vehicles with long wheelbase (vans)
total height	HG	5193 mm
total width	BG	4100 mm*
clear height	HL	5146 mm
column height	HS	3243 mm
vertical travel	HW	1950 mm
length of stroke max.	HO	2065 mm
pivoting height min.	HU	120 mm
adjusting range of support disk	HT	85 mm - 115 mm
pivoting range of support arm		100°
support range	AB	965 mm - 1845 mm
column clearance	BL	2849 mm*
outer column width	BA	3479 mm*
baseplate overlap	BP	105 mm
outer width of baseplate	BGa	3689 mm*
inner width of baseplate	BGi	2729 mm*
drive-through clearance	BH	2530 mm (2530 mm - 2780 mm)
load capacity		5500 kg
operating temperature		+5...+40 °C
dead weight (incl. packaging)		1320 kg (1525 kg)
packaging dimension (L x W x H)		two package á 3175 mm x 760 mm x 960 mm
anchorage		HILTI HIT-HY 200-A + HAS-U 5.8 M16
concrete quality		min. C20/25 (DIN EN 1992)
rated capacity		2 x 4.0 kW (S3-20 %)
power supply	50 Hz	3x 400 V +N +PE; C32A + RCD (30 mA)
air supply *(provided by the customer)*	8 bar	max. available flow rate at 6 bar working pressure
		100 l/min (VZ 990488/VZ 990489)
		300 l/min (VZ 990500/VZ 990501)
lifting time		ca. 40/40 s

* Dimensions refer to drive-through clearance BH = 2530 mm

Schutzvermerk beachten nach DIN ISO 16016	Maßstab 1:50	Materialnummer 1401261	Revision 05
	Konfigurationstyp	Dokumenttyp	Änderungsnr. 100863 / Büro 300
MAHA GROUP	Benennung **MA STAR 5.5 narrow - Product Datasheet**		
	Dokumentnummer **F4792**	Version **H** / A3	Blatt 1 / von 3
Datum, Ersteller 1.9.2022 MKRAUS	Datum, Prüfer 01.09.2022 MKRAUS	Datum, Freigabe 01.09.2022 MKRAUS	alte Materialnummer

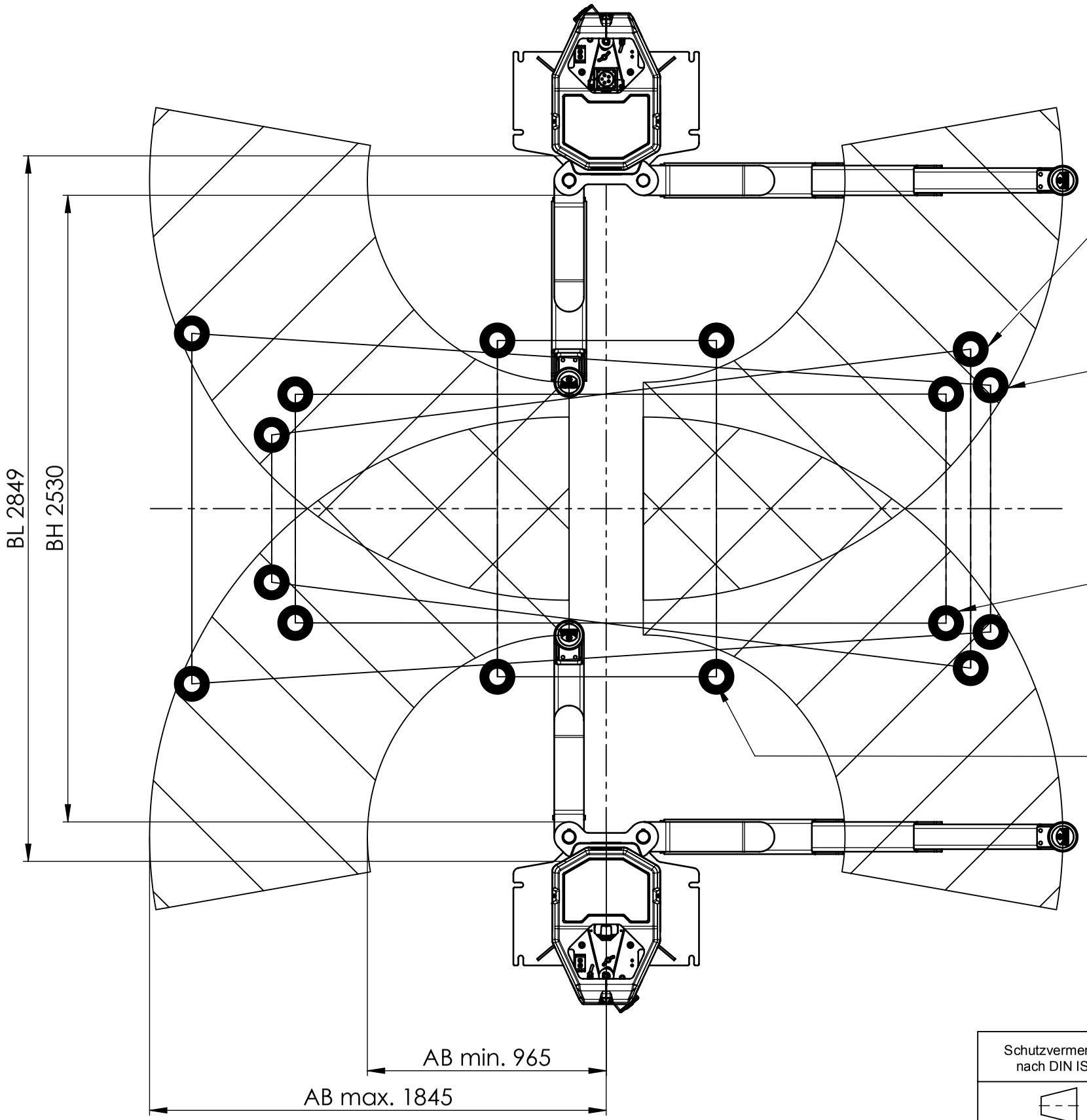

MB Sprinter L2
A/B/C
595/1288/2824

VW Crafter L4 + L5
Zwillingsbereifung / twin tyres
A/B/C
1415/996/3227

MB Sprinter L3 + L4
A/B/C
923/925/2629

Smart Fortwo C 453 Coupe
A/B/C
1358/1358/885

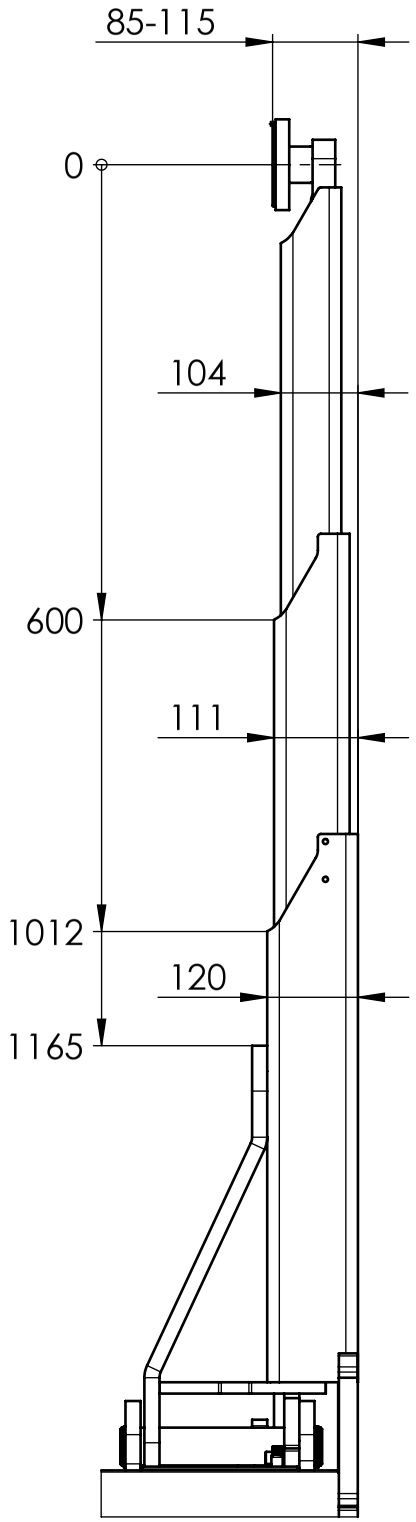

Schutzvermerk beachten nach DIN ISO 16016	Maßstab 1:20	Materialnummer 1401261	Revision 03
	Konfigurationstyp	Dokumenttyp	Änderungsnr. 100552 / Büro 300
MAHAGROUP	Benennung **MA STAR 5.5 - Aufnahmebereich / support range**		
	Dokumentnummer **F4792 schmal / narrow**	Version -- / A3	Blatt 2 / von 3
Datum, Ersteller 16.3.2021 MKRAUS	Datum, Prüfer 22.03.2021 MKRAUS	Datum, Freigabe 22.03.2021 MKRAUS	alte Materialnummer

SWG/10025993/DE/--

MAHA MKRAUS 22.03.2021 17:03:56

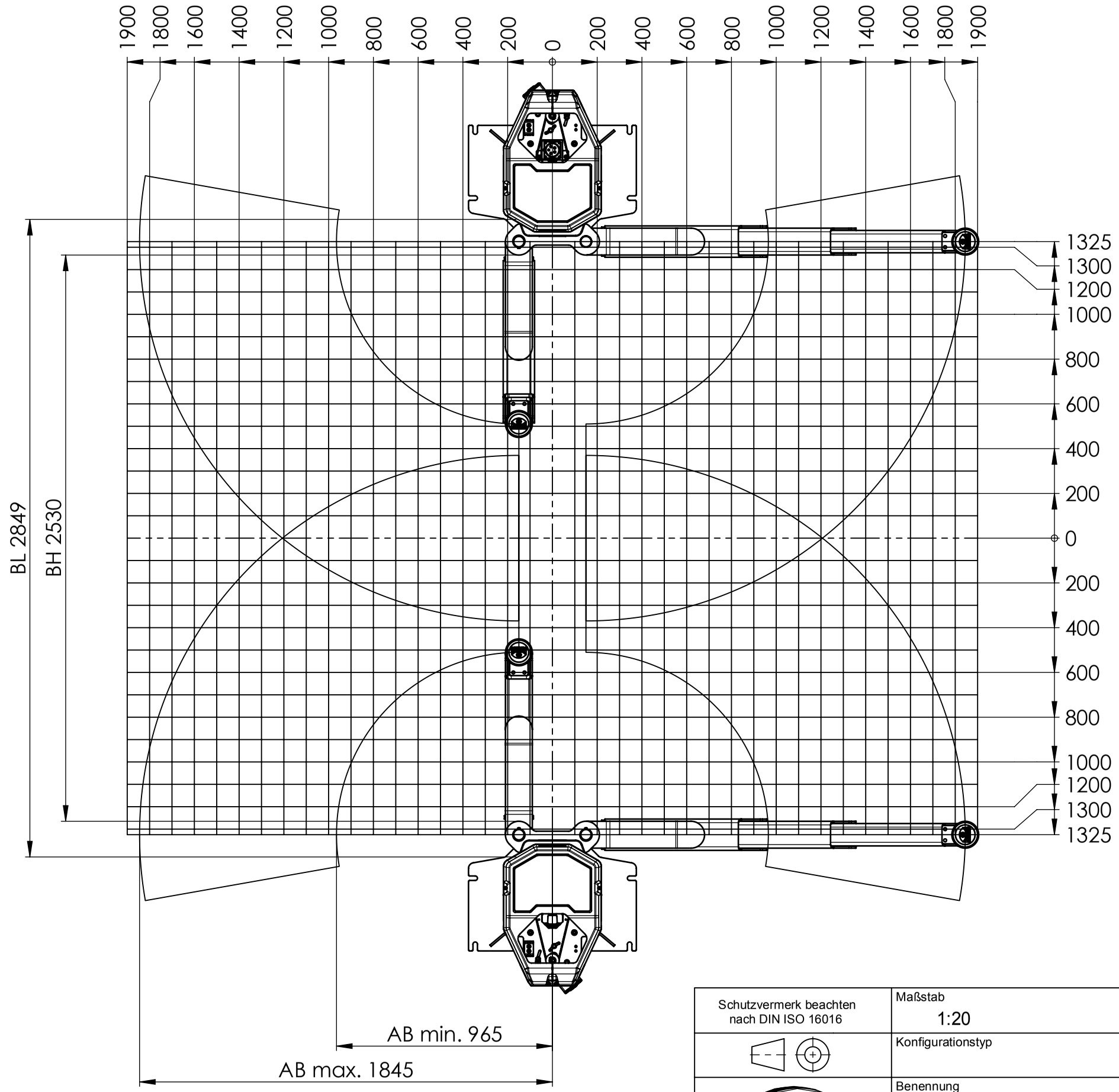

Schutzvermerk beachten nach DIN ISO 16016	Maßstab 1:20	Materialnummer 1401261	Revision 03
	Konfigurationstyp	Dokumenttyp	Änderungsnr. 100552 / Büro 300
MAHA GROUP	Benennung **MA STAR 5.5 - Aufnahmebereich / support range**		
	Dokumentnummer **F4792 schmal / narrow**	Version -- / A3	Blatt 3 / von 3
Datum, Ersteller 16.3.2021 MKRAUS	Datum, Prüfer 22.03.2021 MKRAUS	Datum, Freigabe 22.03.2021 MKRAUS	alte Materialnummer

SWG/10025993/DE/--

MAHA MKRAUS 22.03.2021 17:03:56

MA STAR triple safety *****

MA STAR 5.5 (VP 451186 / VP 451187)

Attention:
The quality of the foundation plate has to be checked by the client prior to installation!

All dimension in m
All dimensions have to be checked on site
In case of ductwork, use max. 45° bends

Supply line in-ground	Supply line via ceiling
Install ductwork for cables Ø50mm, Insert the cable with an overlap of approx. 4m. Place the cable at the right column!	Place the cable at the right column. Connection by CEE-plug device 32A 5p 6h. Must be prepared and certified beforehand!

Attention:
All highlighted dimensions refer to the recommended drive through clearance of 2,63m! (see technical datasheet)

Supply line:
3x400V +N +PE; C32A + RCD (30mA); rated power 2x4,0kW
min. cross-sectional area of supply line 5x2,5 mm2

Connection of columns left-right via cable brigde prepared for optional in-ground wiring

The electrical connection of the Energy-Kit must be prepard on site.
Connection by Schuko plug device (1x230V, 16A + RCD(30mA)) at the corresponding column.
The power line and plug device must be prepared and certified beforehand!
In case of compressed air supply, a pneumatic hose Ø9mm has to be placed at the corresponding column (air supply 8bar).

The locally applicable regulations and standards must be fullfilled for all electrical installations!

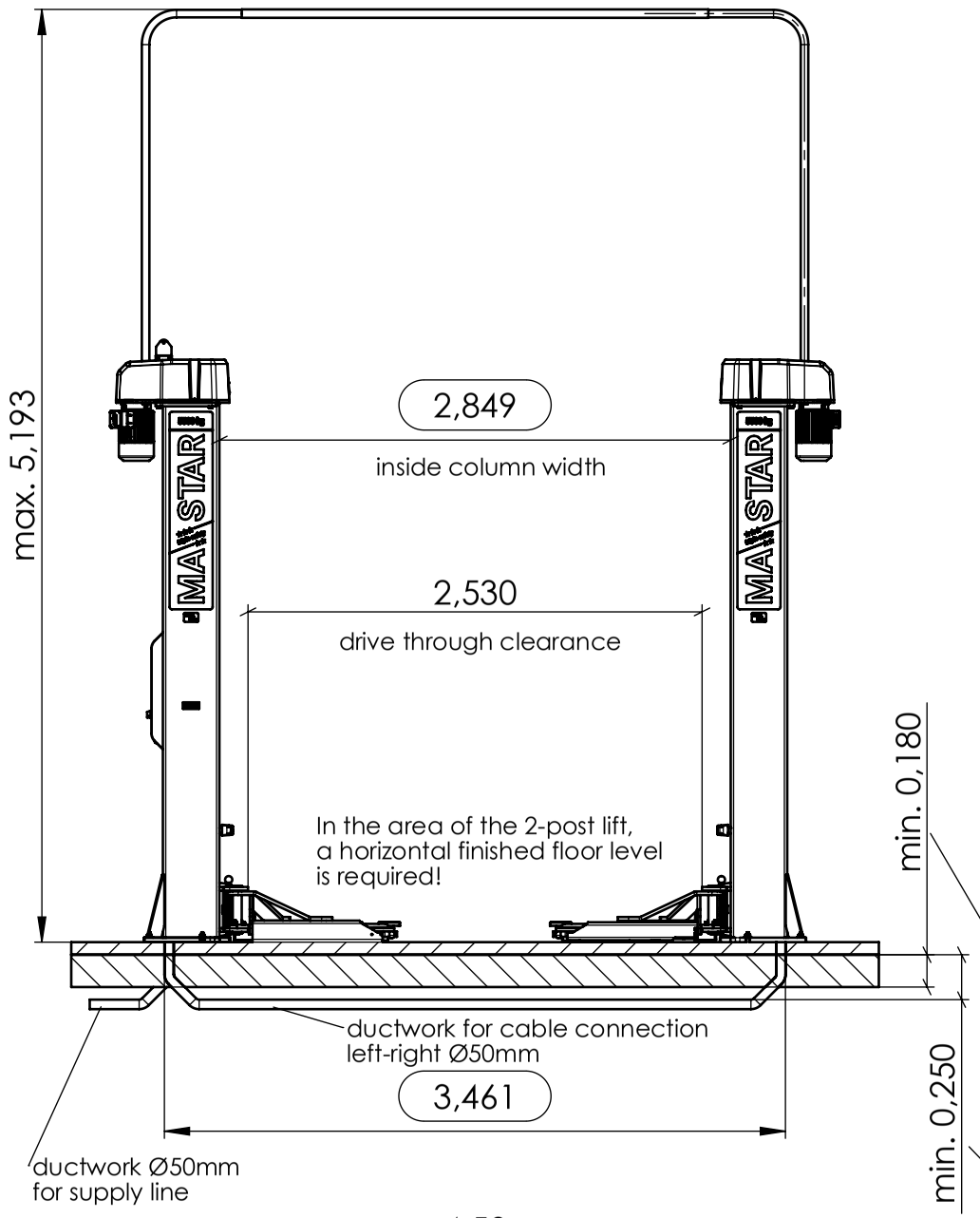

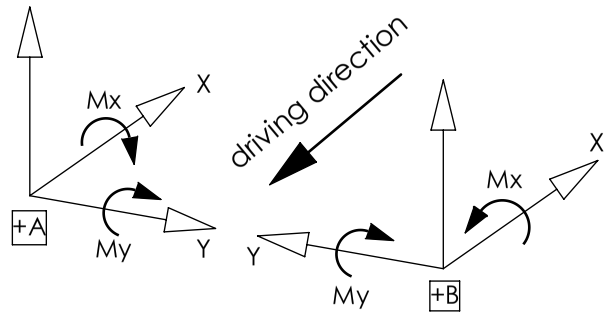

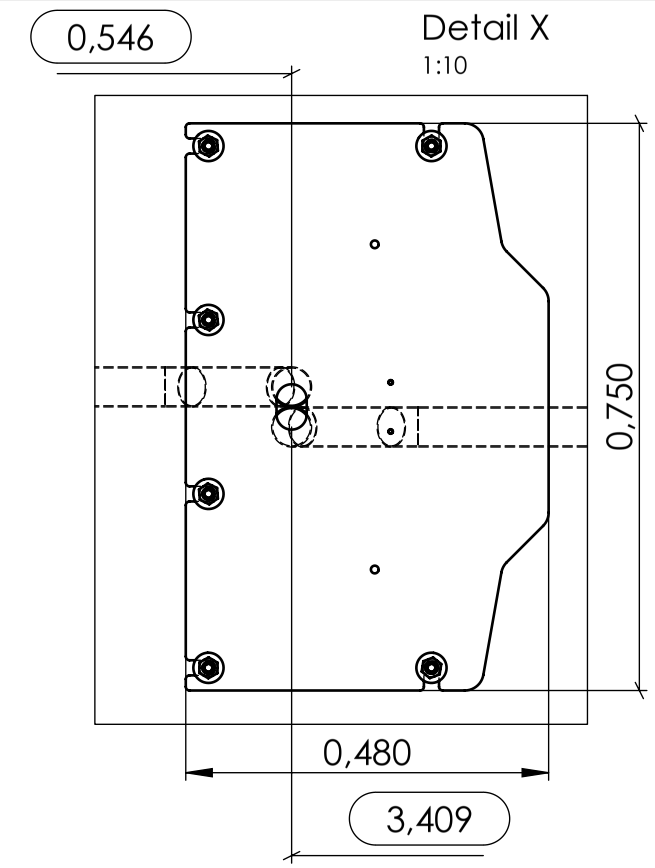

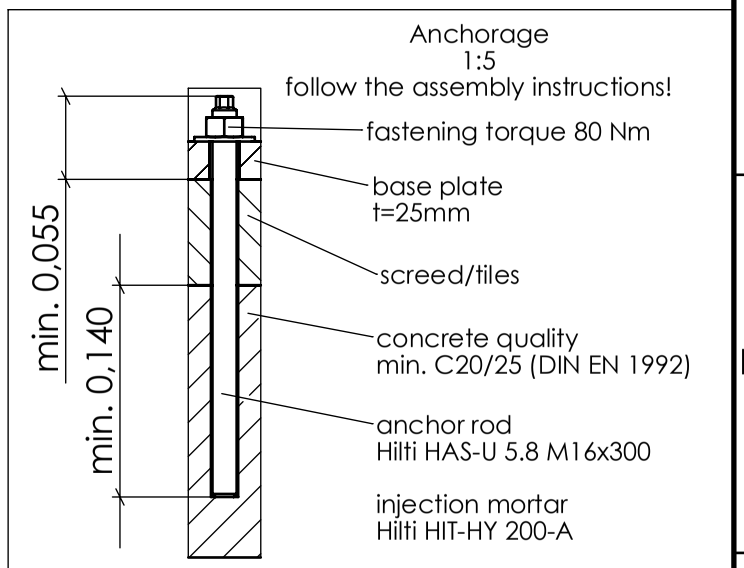

Attention:
The installation material VM 999079 is only certified for max. 100mm height of floor construction (screed/tiles)
The standard installation material can not be used for higher floor constructions!
(Please notify before installation)

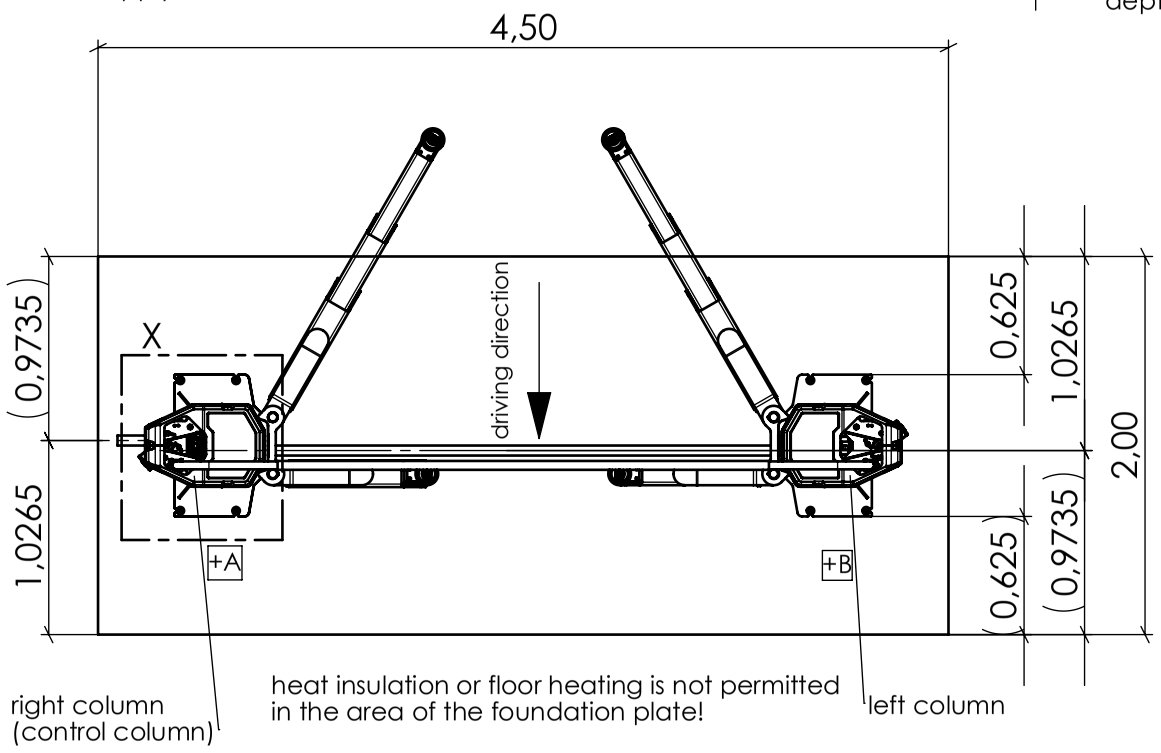

Type	max. load (N)		max. torque (Nm) per column	
	dead weight of lift (N)	rated capacity (N)	Mx	My
MA STAR 5.5	13.100	55.000	35.110	37.280

calculation of load according to EN 1493:2010 without consideration of safety factors

Schutzvermerk beachten nach DIN ISO 16016	Maßstab 1:40	Materialnummer 1404750	Revision 01
	Konfigurationstyp Fundamentplan	Dokumenttyp	Änderungsnr. 100659 / Büro 300
MAHA GROUP	Benennung **MA STAR 5.5 narrow - foundation plan**		
	Dokumentnummer **F4793**	Version **B** / A3	Blatt 1 / von 1
Datum, Ersteller 23.3.2021 MKRAUS	Datum, Prüfer 23.03.2021 MKRAUS	Datum, Freigabe 24.03.2021 KBRENNER	alte Materialnummer

SWG/10021366/DE/B

MAHA MKRAUS 24.03.2021 10:58:20

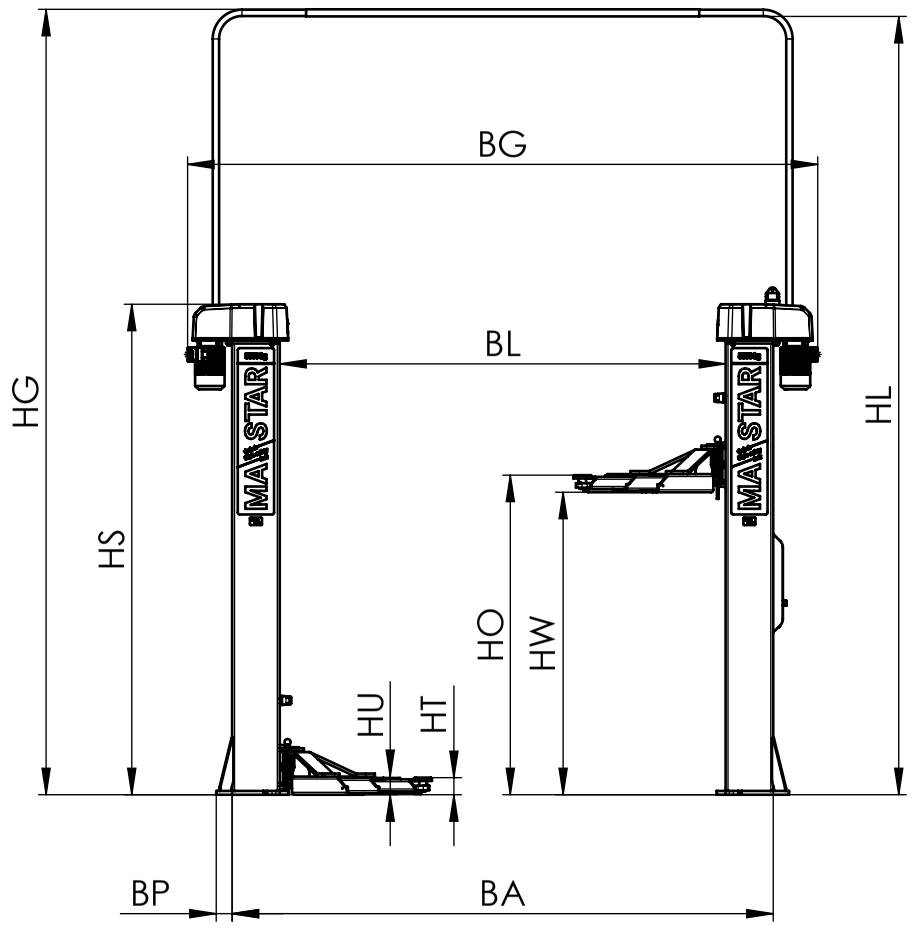

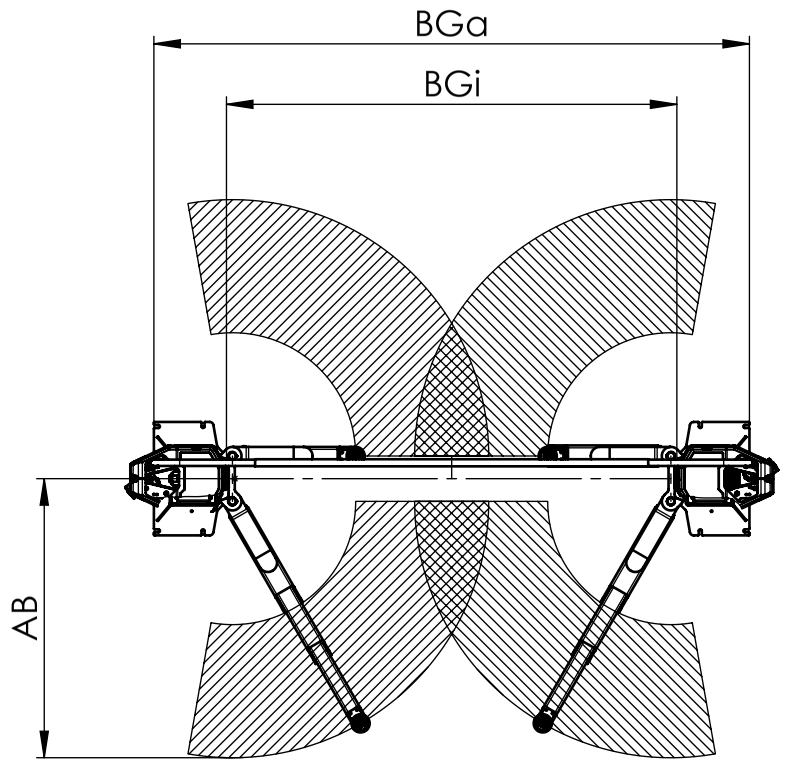

technical data

VP 451186/VP451187		MA STAR 5.5
Installation width		wide (F4794) recommended for vehicles with short wheelbase (cars)
total height	HG	5193 mm
total width	BG	4350 mm*
clear height	HL	5146 mm
column height	HS	3243 mm
vertical travel	HW	1950 mm
length of stroke max.	HO	2065 mm
pivoting height min.	HU	120 mm
adjusting range of support disk	HT	85 mm - 115 mm
pivoting range of support arm		100°
support range	AB	965 mm - 1845 mm
column clearance	BL	3099 mm*
outer column width	BA	3729 mm*
baseplate overlap	BP	105 mm
outer width of baseplate	BGa	3939 mm*
inner width of baseplate	BGi	2979 mm*
drive-through clearance	BH	2780 mm (2530 mm - 2780 mm)
load capacity		5500 kg
operating temperature		+5...+40 °C
dead weight (incl. packaging)		1320 kg (1525 kg)
packaging dimension (L x W x H)		two package á 3175 mm x 760 mm x 960 mm
anchorage		HILTI HIT-HY 200-A + HAS-U 5.8 M16
concrete quality		min. C20/25 (DIN EN 1992)
rated capacity		2 x 4.0 kW (S3-20 %)
power supply	50 Hz	3x 400 V +N +PE; C32A + RCD (30 mA)
air supply *(provided by the customer)*	8 bar	max. available flow rate at 6 bar working pressure
		100 l/min (VZ 990488/VZ 990489)
		300 l/min (VZ 990500/VZ 990501)
lifting time		ca. 40/40 s

* Dimensions refer to drive-through clearance BH = 2780 mm

Schutzvermerk beachten nach DIN ISO 16016	Maßstab 1:50		Materialnummer 1401261	Revision 05	
	Konfigurationstyp		Dokumenttyp	Änderungsnr. 100863	Büro 300
MAHAGROUP	Benennung **MA STAR 5.5 wide - Product Datasheet**				
	Dokumentnummer **F4794**		Version **H**	A3	Blatt 1 / von 3
Datum, Ersteller 1.9.2022 MKRAUS	Datum, Prüfer 01.09.2022 MKRAUS	Datum, Freigabe 01.09.2022 MKRAUS	alte Materialnummer		

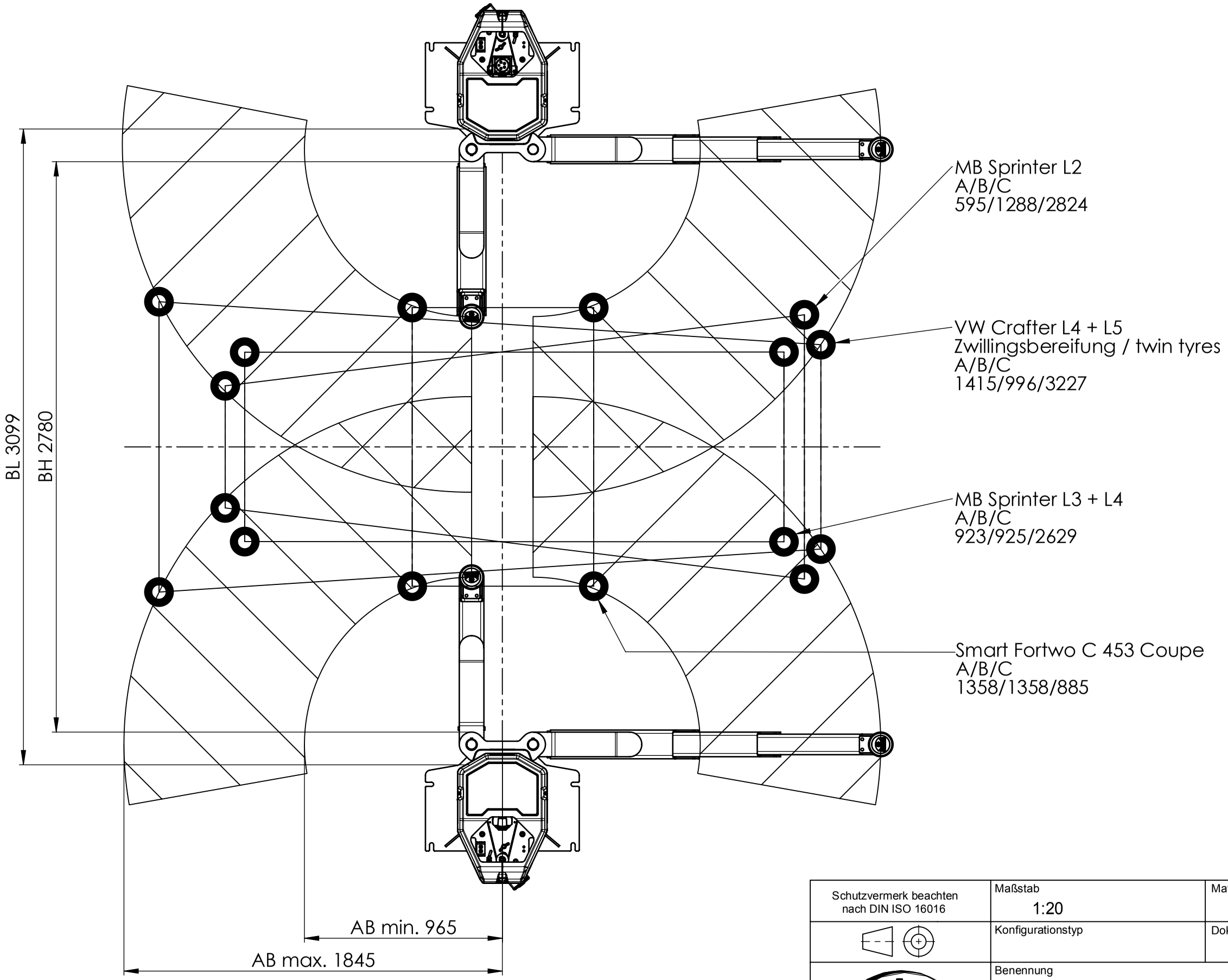

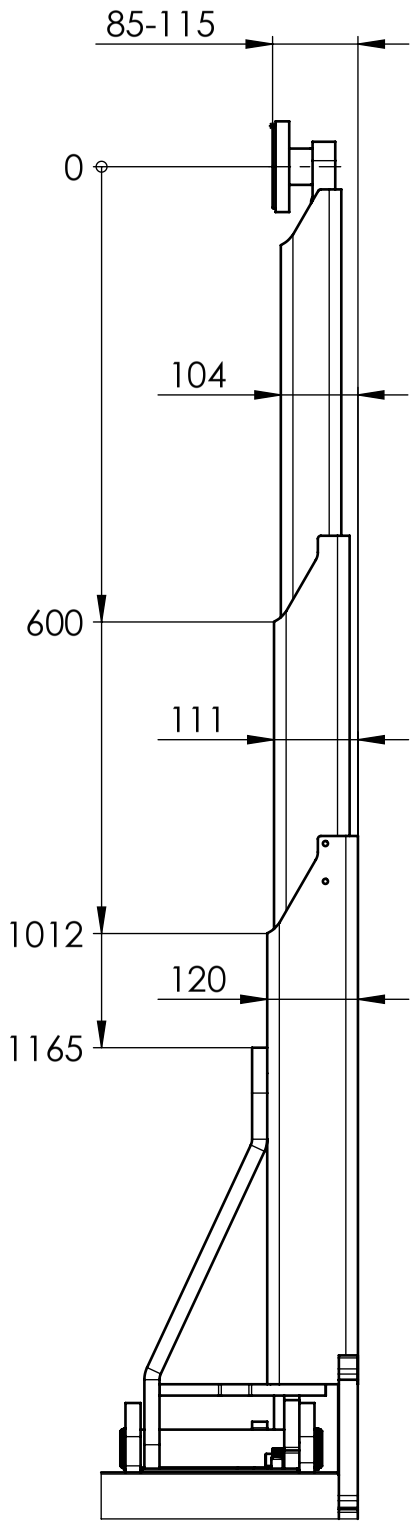

Schutzvermerk beachten nach DIN ISO 16016	Maßstab 1:20		Materialnummer 1401261	Revision 03	
	Konfigurationstyp		Dokumenttyp	Änderungsnr. 100552	Büro 300
MAHAGROUP	Benennung **MA STAR 5.5 - Aufnahmebereich / support range**				
	Dokumentnummer **F4794 breit / wide**		Version --	A3	Blatt 2 von 3
Datum, Ersteller 16.3.2021 MKRAUS	Datum, Prüfer 22.03.2021 MKRAUS	Datum, Freigabe 22.03.2021 MKRAUS	alte Materialnummer		

SWG/10025993/DE/--

MAHA MKRAUS 22.03.2021 17:03:56

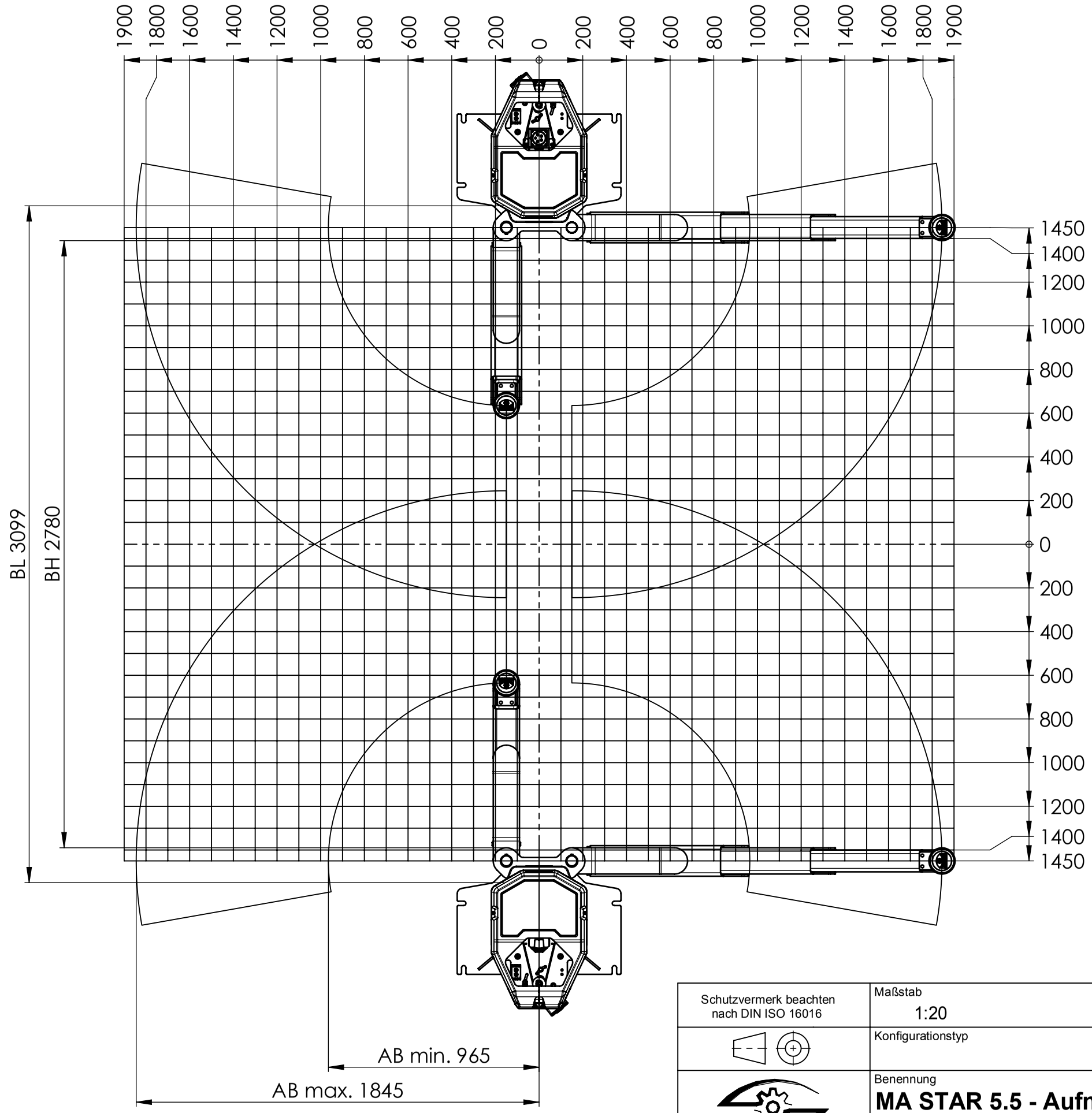

Schutzvermerk beachten nach DIN ISO 16016	Maßstab 1:20		Materialnummer 1401261	Revision 03	
	Konfigurationstyp		Dokumenttyp	Änderungsnr. 100552	Büro 300
MAHA GROUP	Benennung **MA STAR 5.5 - Aufnahmebereich / support range**				
	Dokumentnummer **F4794 breit / wide**		Version --	A3	Blatt 3 / von 3
Datum, Ersteller 16.3.2021 MKRAUS	Datum, Prüfer 22.03.2021 MKRAUS	Datum, Freigabe 22.03.2021 MKRAUS	alte Materialnummer		

SWG/10025993/DE/--

MAHA MKRAUS 22.03.2021 17:03:56

MA STAR triple safety *****

MA STAR 5.5 (VP 451186 / VP 451187)

Attention:
The quality of the foundation plate has to be checked by the client prior to installation!

All dimension in m
All dimensions have to be checked on site
In case of ductwork, use max. 45° bends

Supply line in-ground	Supply line via ceiling
Install ductwork for cables Ø50mm, Insert the cable with an overlap of approx. 4m. Place the cable at the right column!	Place the cable at the right column. Connection by CEE-plug device 32A 5p 6h. Must be prepared and certified beforehand!

Attention:
All highlighted dimensions refer to the recommended drive through clearance of 2,63m! (see technical datasheet)

Supply line:
3x400V +N +PE; C32A + RCD (30mA); rated power 2x4,0kW
min. cross-sectional area of supply line 5x2,5 mm2

Connection of columns left-right via cable brigde prepared for optional in-ground wiring

The electrical connection of the Energy-Kit must be prepard on site.
Connection by Schuko plug device (1x230V, 16A + RCD(30mA)) at the corresponding column.
The power line and plug device must be prepared and certified beforehand!
In case of compressed air supply, a pneumatic hose Ø9mm has to be placed at the corresponding column (air supply 8bar).

The locally applicable regulations and standards must be fullfilled for all electrical installations!

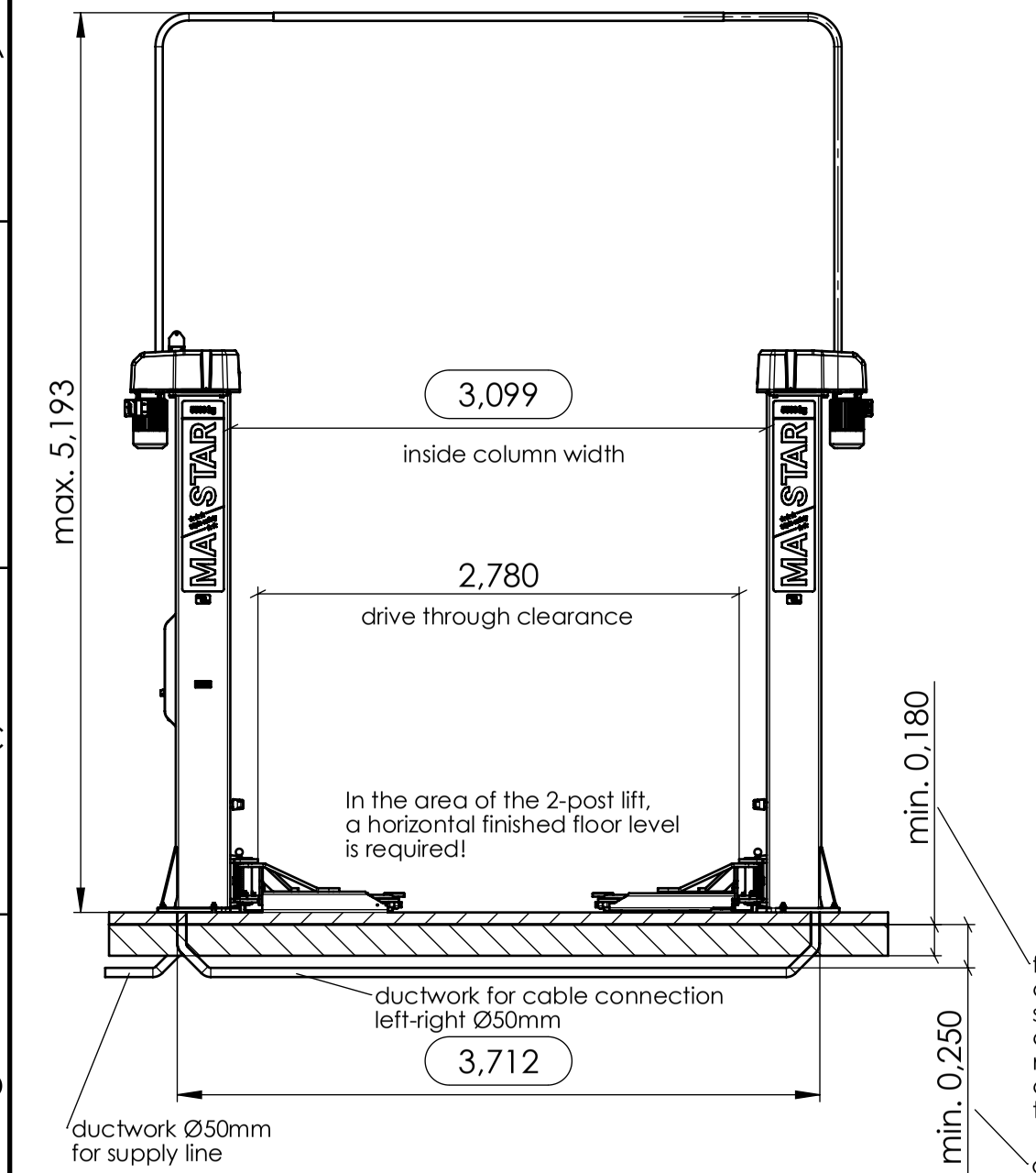

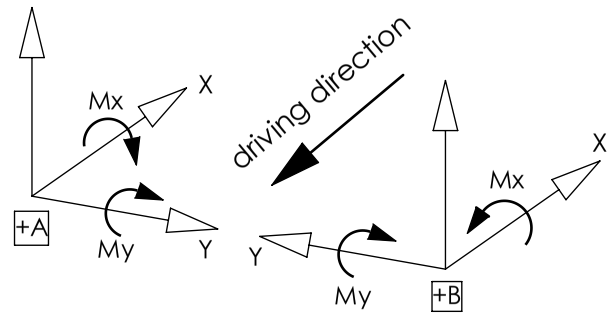

Type	max. load (N)		max. torque (Nm) per column	
	dead weight of lift (N)	rated capacity (N)	Mx	My
MA STAR 5.5	13.100	55.000	39.030	35.460
calculation of load according to EN 1493:2010 without consideration of safety factors				

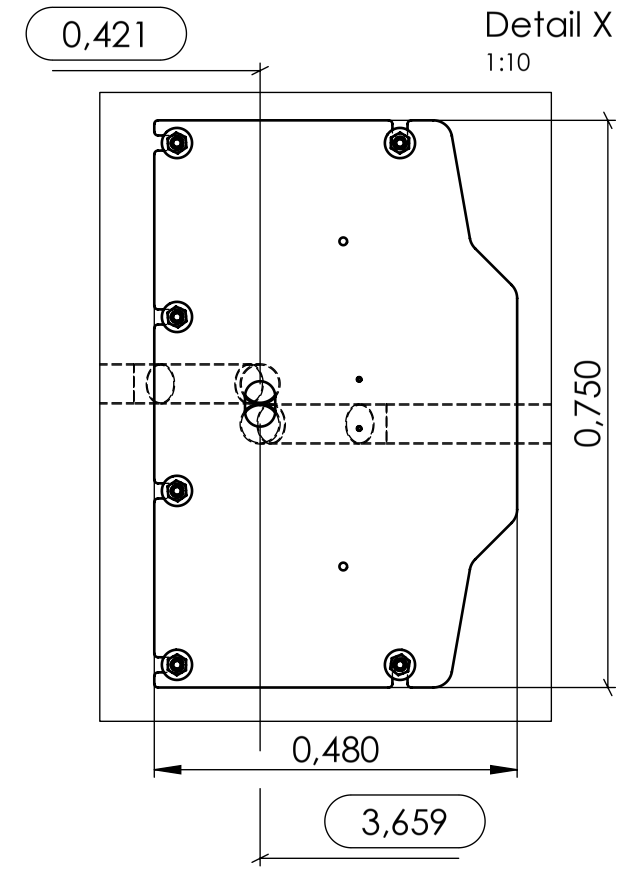

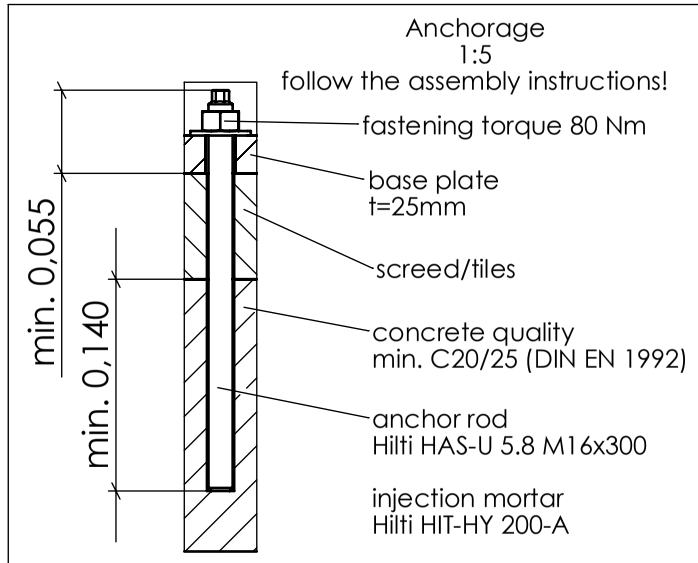

Attention:
The installation material VM 999079 is only certified for max. 100mm height of floor construction (screed/tiles)
The standard installation material can not be used for higher floor constructions!
(Please notify before installation)

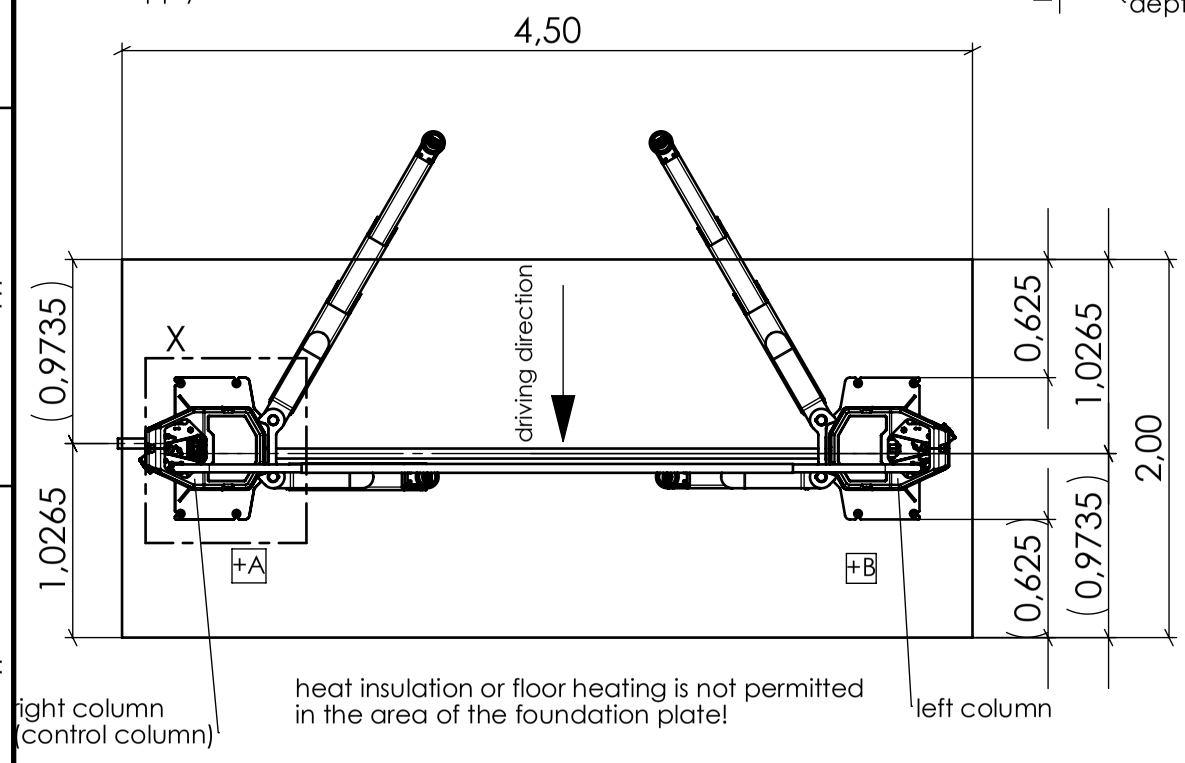

Schutzvermerk beachten nach DIN ISO 16016	Maßstab 1:40	Materialnummer 1404750	Revision 01	
	Konfigurationstyp Fundamentplan	Dokumenttyp	Änderungsnr. 100659	Büro 300
MAHA GROUP	Benennung **MA STAR 5.5 wide - foundation plan**			
	Dokumentnummer **F4795**	Version **B**	A3	Blatt 1 von 1
Datum, Ersteller 23.3.2021 MKRAUS	Datum, Prüfer 23.03.2021 MKRAUS	Datum, Freigabe 24.03.2021 KBRENNER	alte Materialnummer	

SWG/10021366/DE/B

MAHA MKRAUS 24.03.2021 10:58:20

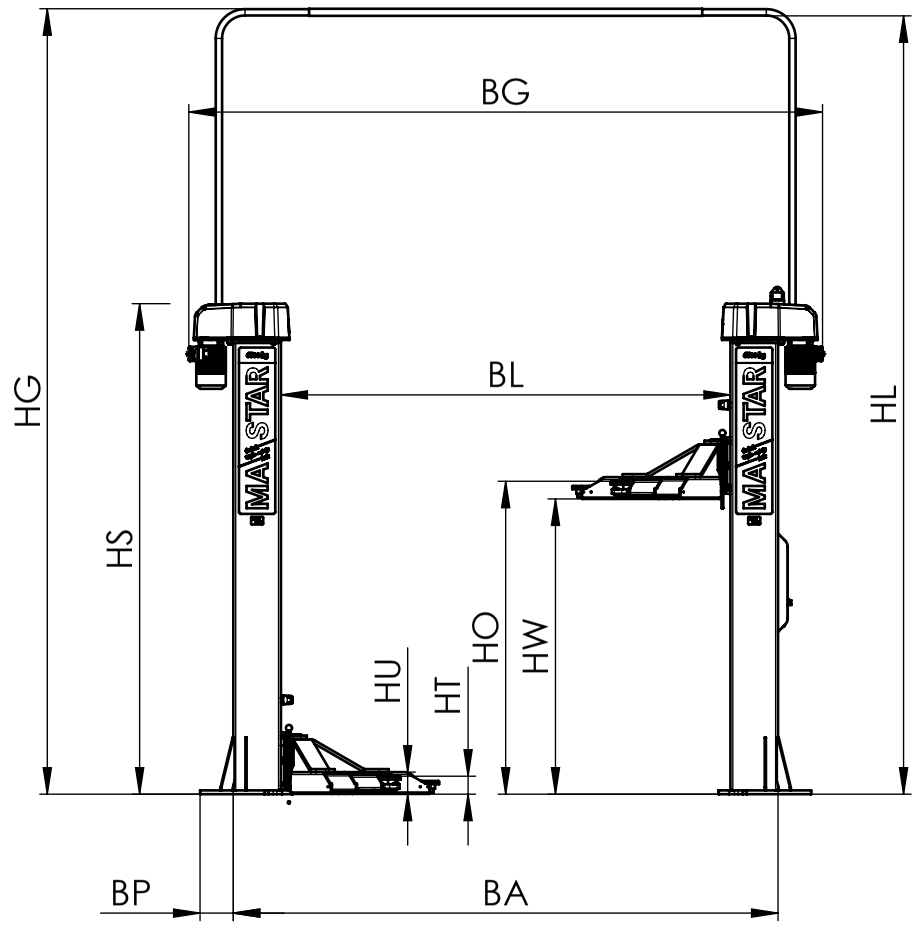

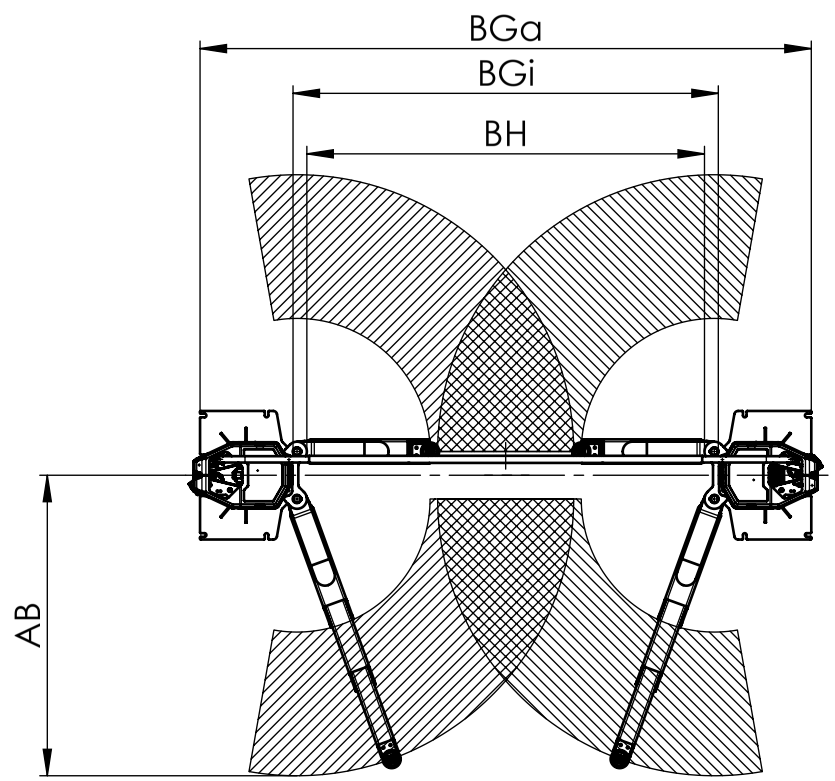

technical data		
VP 451189/VP 451190		MA STAR 6.5
Installation width		standard (F4797) recommended for vehicles with long wheelbase (vans)
total height	HG	5193mm
total width	BG	4192mm*
clear height	HL	5146mm
column height	HS	3243mm
vertical travel	HW	1950mm
length of stroke max.	HO	2065mm
pivoting height min.	HU	144mm
adjusting range of support disk	HT	85mm-115mm
pivoting range of support arm		100°
support range	AB	1037-1987mm
column clearance	BL	2973mm*
outer column width	BA	3603mm*
baseplate overlap	BP	220mm
outer width of baseplate	BGa	4043mm*
inner width of baseplate	BGi	2813mm*
drive-through clearance	BH	2630mm (2630mm-2780mm)
load capacity		6500kg
operating temperature		+5...+40°C
dead weight (incl. packaging)		1520kg (1780kg)
packaging dimension (L x W x H)		two packages á 3185mm x 801mm x 1100mm
anchorage		HILTI HIT-HY 200-A + HAS-U 5.8 M20
concrete quality		min. C20/25 (DIN EN 1992)
rated capacity		2 x 4.0 kW (S3-20%)
power supply	50Hz	3x400V +N +PE; C32A + RCD (30mA)
air supply *(provided by the customer)*	8 bar	max. available flow rate at 6 bar working pressure
		100 l/min (VZ 990488/VZ 990489)
		300 l/min (VZ 990500/VZ 990501)
lifting time		ca. 44/44s

* Dimensions refer to drive-through clearance BH = 2630mm

Schutzvermerk beachten nach DIN ISO 16016	Maßstab 1:50		Materialnummer 1406318	Revision 02	
	Konfigurationstyp		Dokumenttyp	Änderungsnr. 101143	Büro 300
MAHA GROUP	Benennung **MA STAR 6.5 - Product Datasheet**				
	Dokumentnummer **F4797**		Version **C**	A3	Blatt 1 / von 3
Datum, Ersteller 1.9.2022 MKRAUS	Datum, Prüfer 01.09.2022 MKRAUS	Datum, Freigabe 01.09.2022 MKRAUS	alte Materialnummer		

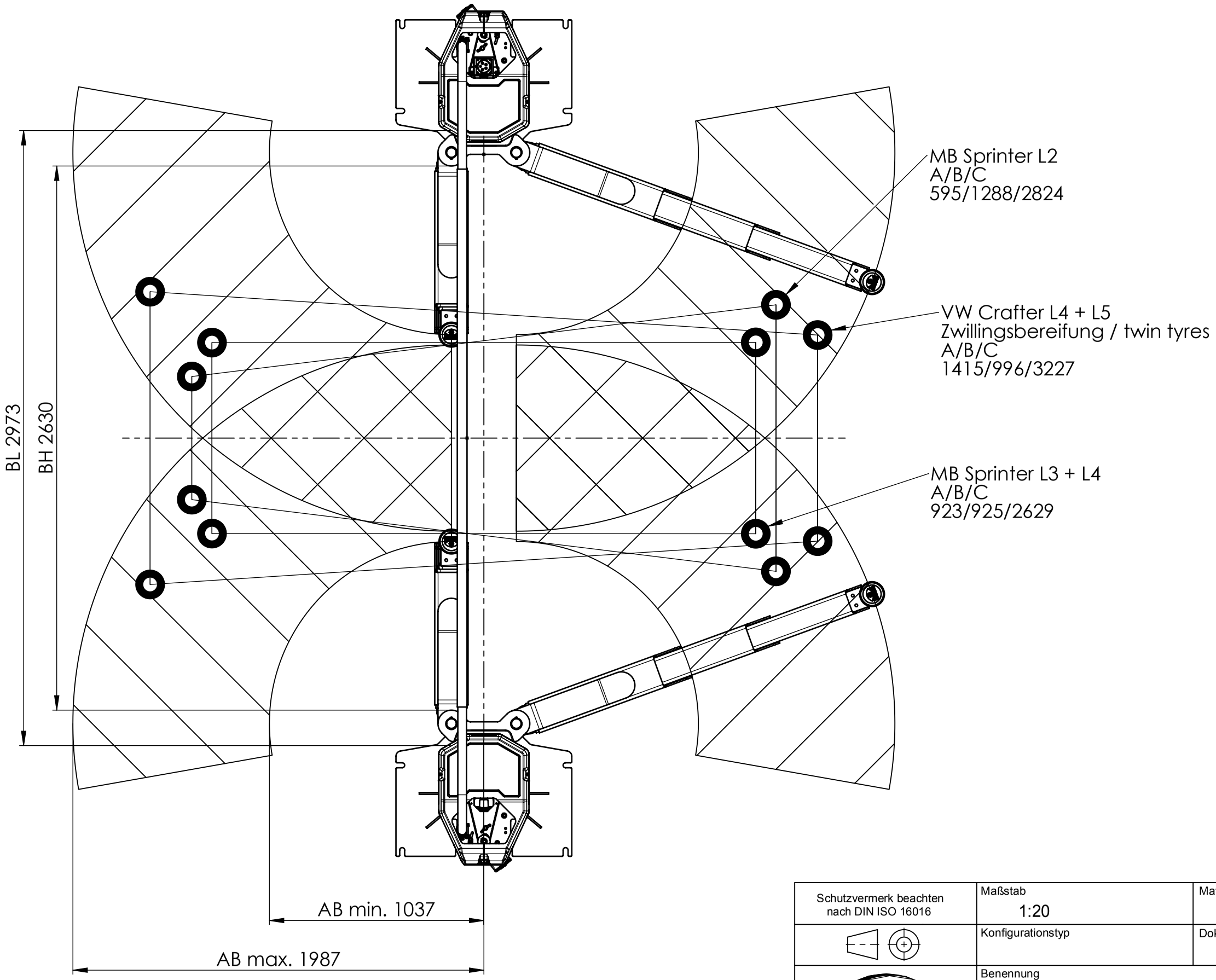

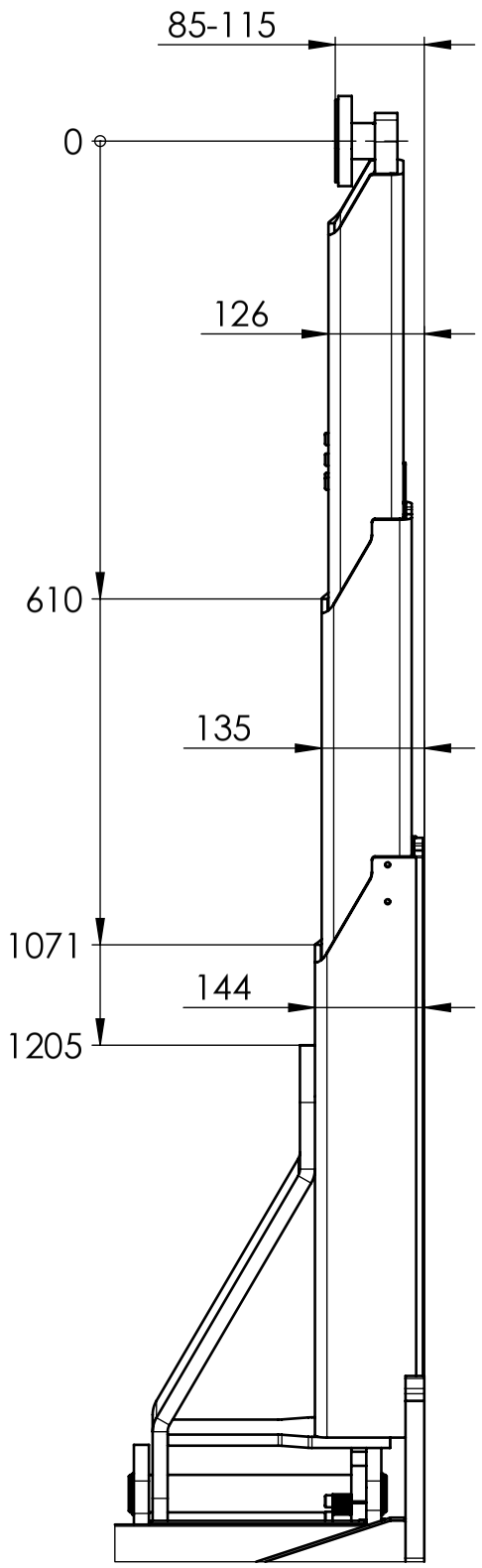

Schutzvermerk beachten nach DIN ISO 16016	Maßstab 1:20	Materialnummer 1406318	Revision 01
	Konfigurationstyp	Dokumenttyp	Änderungsnr. 101105 / Büro 300
MAHAGROUP	Benennung **MA STAR 6.5 - Aufnahmebereich / support range**		
	Dokumentnummer **F4797**	Version **A** / A3	Blatt 2 von 3
Datum, Ersteller 30.11.2021 DNANFACK	Datum, Prüfer 01.12.2021 MKRAUS	Datum, Freigabe 01.12.2021 DNANFACK	alte Materialnummer

SWG/10031768/DE/A

MAHA DNANFACK 02.12.2021 08:03:31

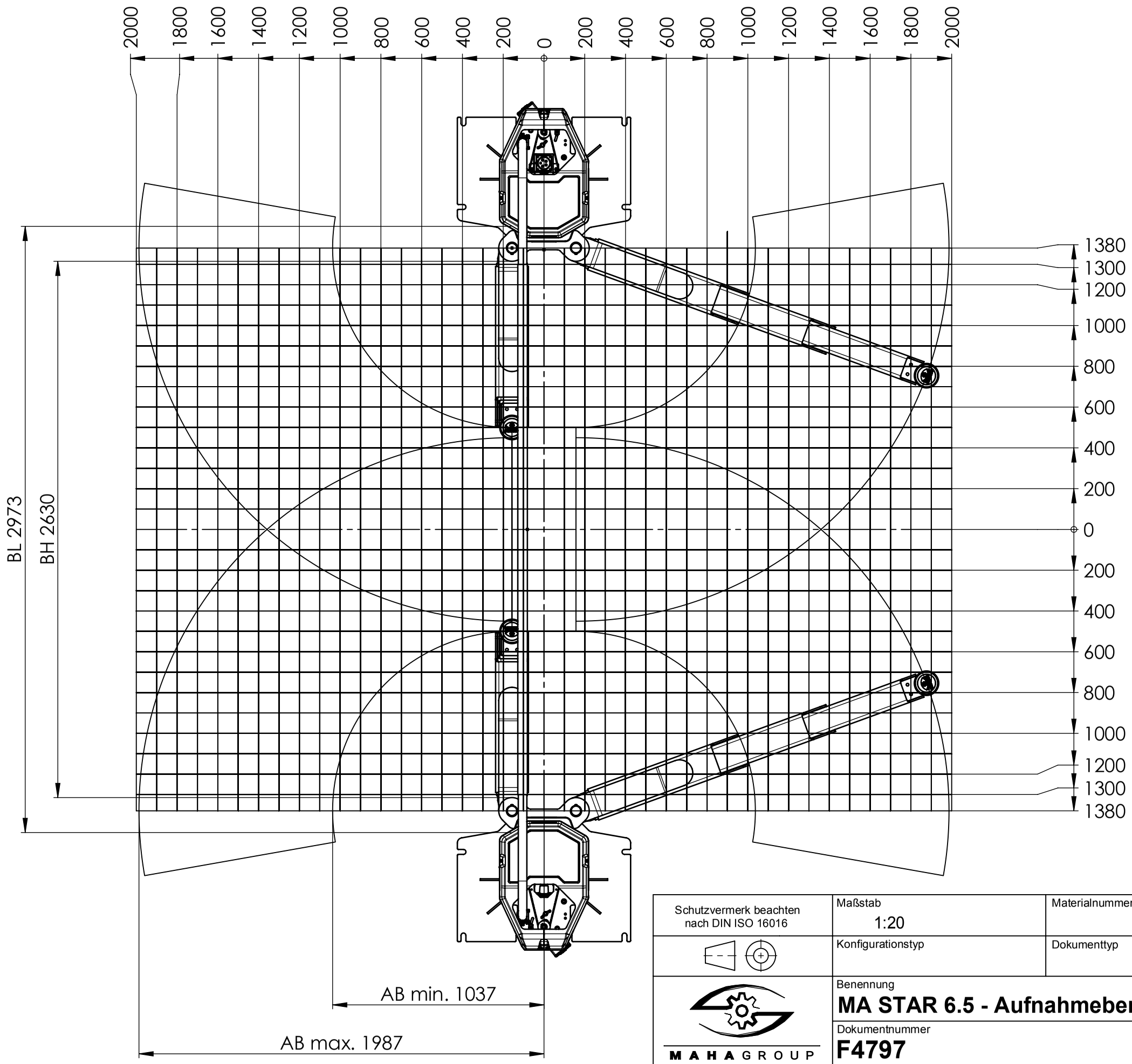

Schutzvermerk beachten nach DIN ISO 16016	Maßstab 1:20	Materialnummer 1406318	Revision 01
	Konfigurationstyp	Dokumenttyp	Änderungsnr. 101105 / Büro 300
MAHAGROUP	Benennung **MA STAR 6.5 - Aufnahmebereich / support range**		
	Dokumentnummer **F4797**	Version **A** / A3	Blatt 3 / von 3
Datum, Ersteller 30.11.2021 DNANFACK	Datum, Prüfer 01.12.2021 MKRAUS	Datum, Freigabe 01.12.2021 DNANFACK	alte Materialnummer

SWG/10031768/DE/A

MAHA DNANFACK 02.12.2021 08:03:31

MA STAR triple safety *****

MA STAR 6.5 (VP 451189 / VP 451190)

Attention:
The quality of the foundation plate has to be checked by the client prior to installation!

All dimension in m
All dimensions have to be checked on site
In case of ductwork, use max. 45° bends

Supply line in-ground	Supply line via ceiling
Install ductwork for cables Ø50mm, Insert the cable with an overlap of approx. 4m. Place the cable at the right column!	Place the cable at the right column. Connection by CEE-plug device 32A 5p 6h. Must be prepared and certified beforehand!

Attention:
All highlighted dimensions refer to the recommended drive through clearance of 2,63m! (see technical datasheet)

Supply line:
3x400V +N +PE; C32A + RCD (30mA); rated power 2x4,0kW
min. cross-sectional area of supply line 5x2,5 mm2

Connection of columns left-right via cable brigde prepared for optional in-ground wiring

The electrical connection of the Energy-Kit must be prepard on site.
Connection by Schuko plug device (1x230V, 16A + RCD(30mA)) at the corresponding column.
The power line and plug device must be prepared and certified beforehand!
In case of compressed air supply, a pneumatic hose Ø9mm has to be placed at the corresponding column (air supply 8bar).

The locally applicable regulations and standards must be fullfilled for all electrical installations!

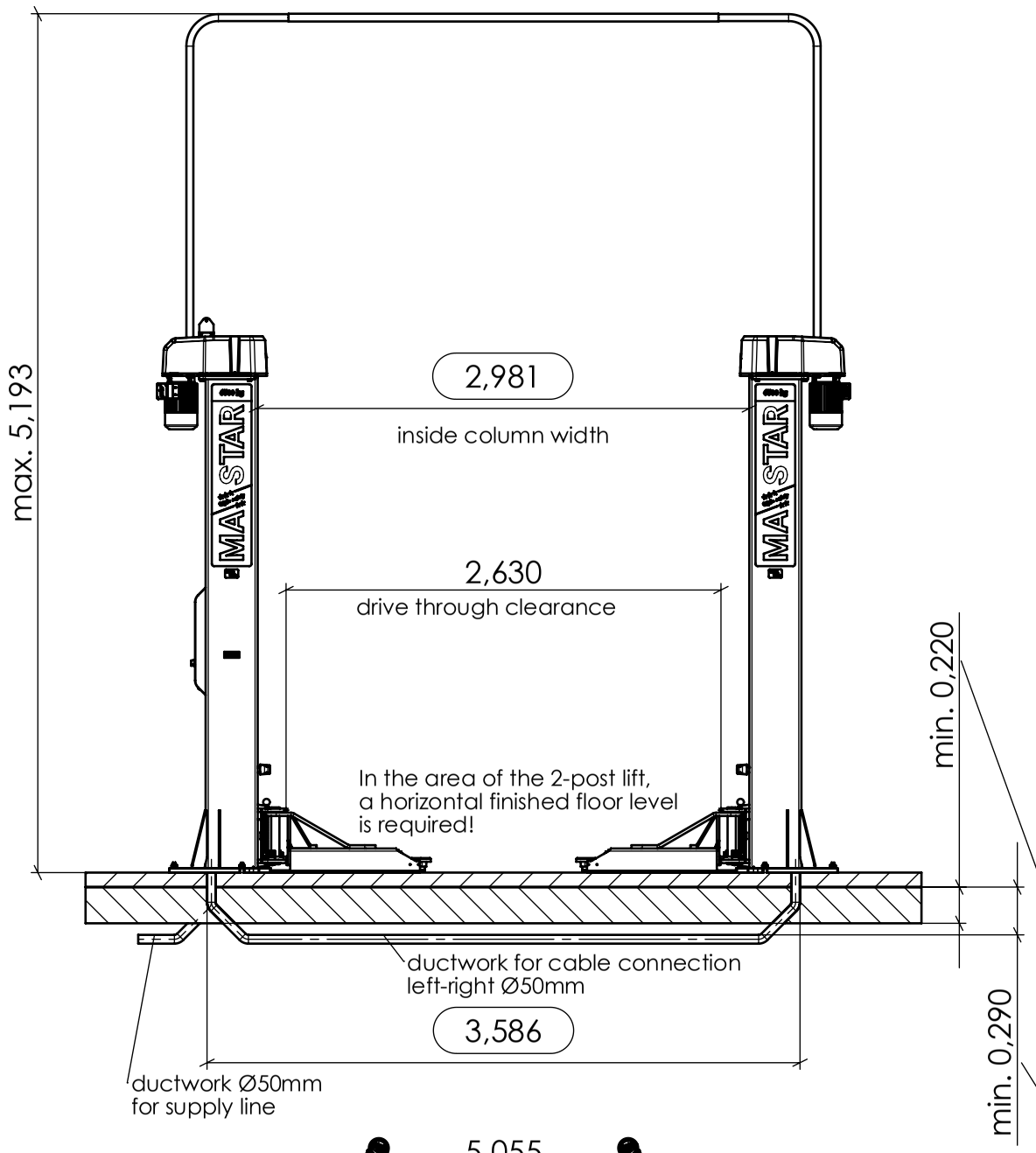

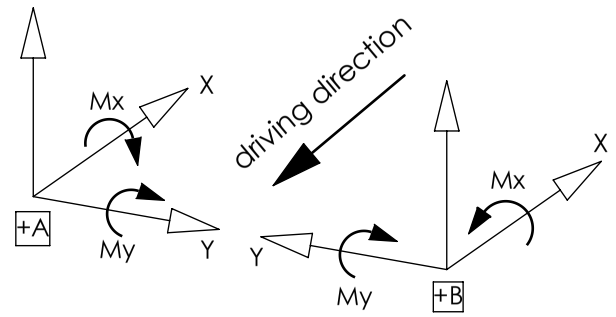

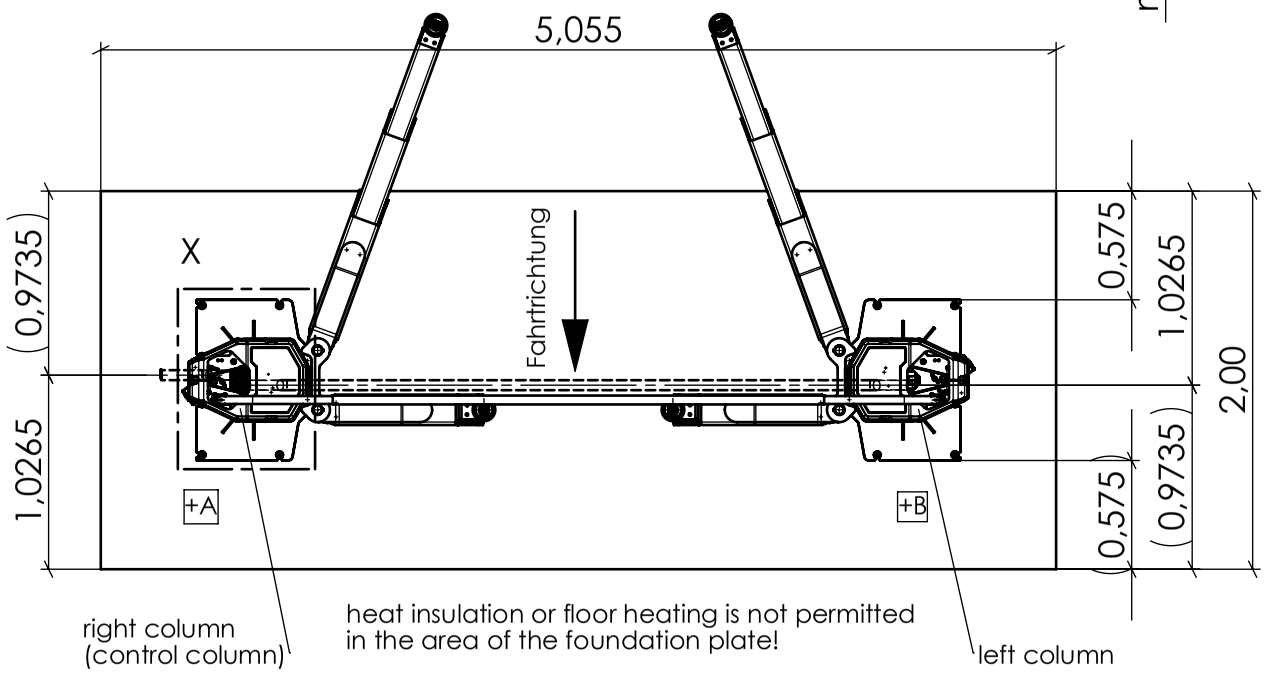

Type	max. load (N)		max. torque (Nm) per column	
	dead weight of lift (N)	rated capacity (N)	Mx	My
MA STAR 6.5	15.100	65.000	44.290	47.850

calculation of load according to EN 1493:2010 without consideration of safety factors

Detail X
1:10

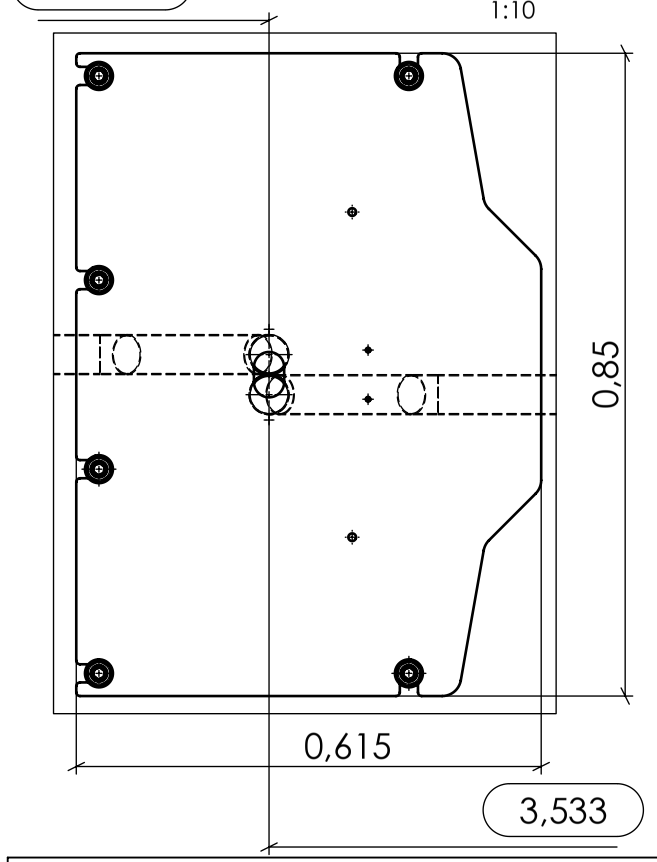

Anchorage
1:5
follow the assembly instructions!

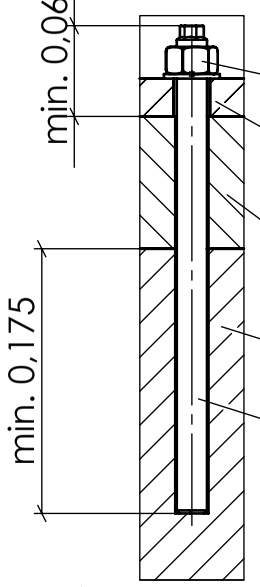

Attention:
The installation material VM 999085 is only certified for max. 100mm height of floor construction (screed/tiles)
The standard installation material can not be used for higher floor constructions!
(Please notify before installation)

Schutzvermerk beachten nach DIN ISO 16016	Maßstab 1:40	Materialnummer 1406490	Revision 01
	Konfigurationstyp Fundamentplan	Dokumenttyp Hauptzeichnung	Änderungsnr. 101222 / Büro 300
MAHA GROUP	Benennung **MA STAR 6.5 - foundation plan standard**		
	Dokumentnummer **F4798**	Version **B** / A3	Blatt 1 / von 1
Datum, Ersteller 15.12.2021 DNANFACK	Datum, Prüfer 15.12.2021 DNANFACK	Datum, Freigabe 15.12.2021 MKRAUS	alte Materialnummer

SWG/10028563/DE/B

MAHA DNANFACK 15.12.2021 16:21:32

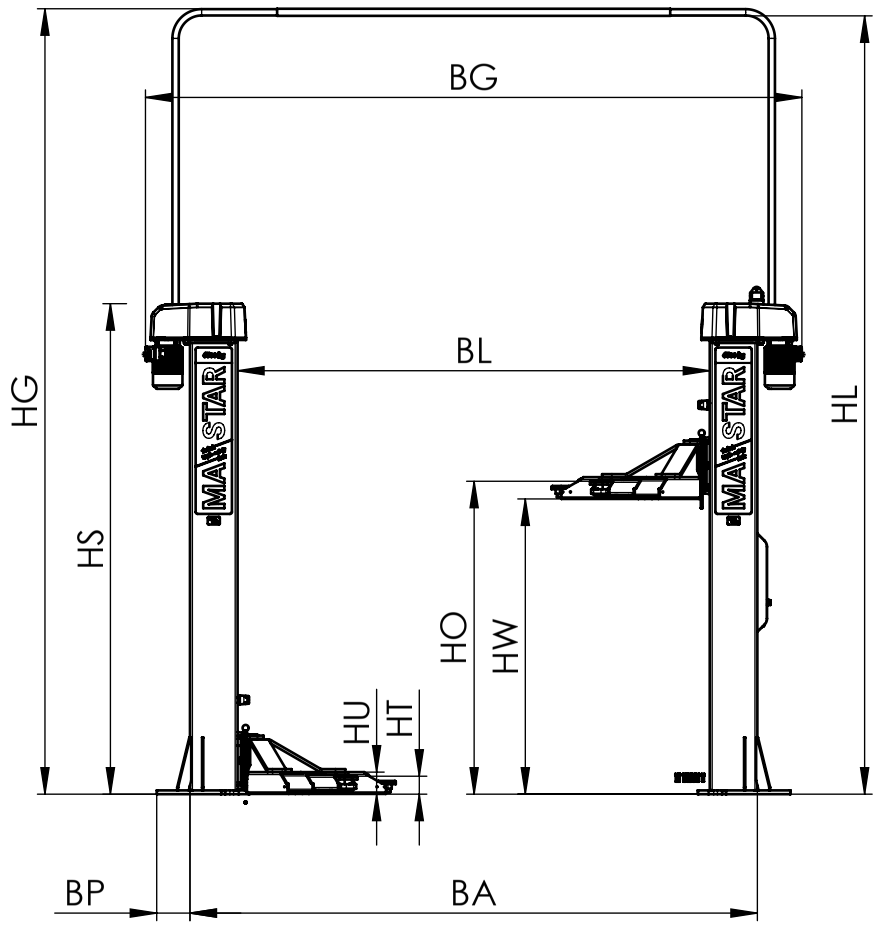

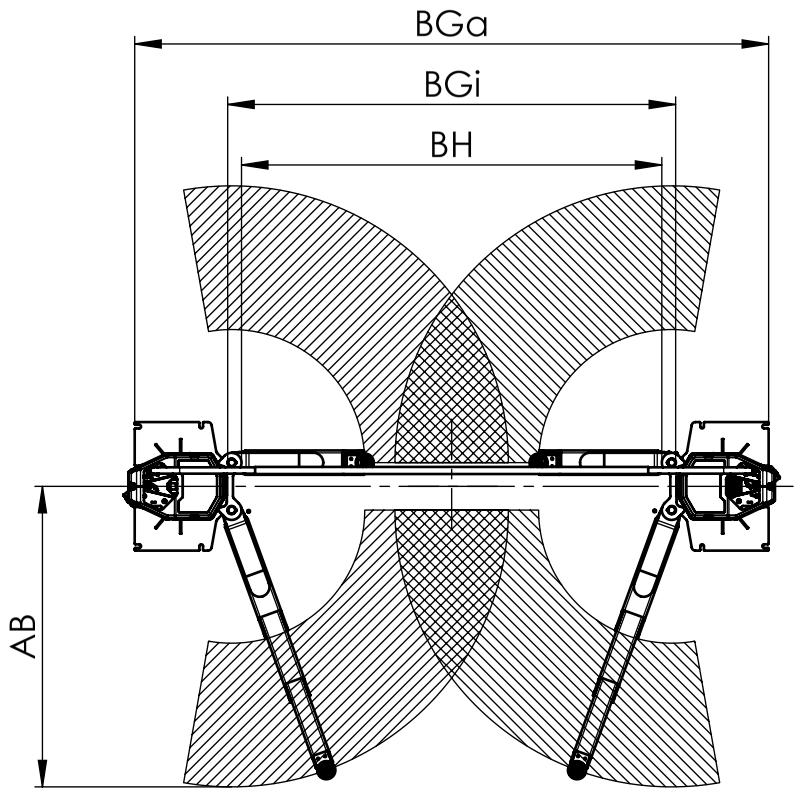

technical data		
VP 451189/VP 451190		MA STAR 6.5
Installation width		wide (F4799)
total height	HG	5193mm
total width	BG	4342mm*
clear height	HL	5146mm
column height	HS	3243mm
vertical travel	HW	1950mm
length of stroke max.	HO	2065mm
pivoting height min.	HU	144mm
adjusting range of support disk	HT	85mm-115mm
pivoting range of support arm		100°
support range	AB	1037mm-1987mm
column clearance	BL	3123mm*
outer column width	BA	3753mm*
baseplate overlap	BP	220mm
outer width of baseplate	BGa	4193mm*
inner width of baseplate	BGi	2963mm*
drive-through clearance	BH	2780mm (2630mm-2780mm)
load capacity		6500kg
operating temperature		+5...+40°C
dead weight (incl. packaging)		1520kg (1780kg)
packaging dimension (L x W x H)		two package á 3185mm x 801mm x 1100mm
anchorage		HILTI HIT-HY 200-A + HAS-U 5.8 M20
concrete quality		min. C20/25 (DIN EN 1992)
rated capacity		2 x 4.0 kW (S3-20%)
power supply	50Hz	3x400V +N +PE; C32A + RCD (30mA)
air supply *(provided by the customer)*	8 bar	max. available flow rate at 6 bar working pressure
		100 l/min (VZ 990488/VZ 990489)
		300 l/min (VZ 990500/VZ 990501)
lifting time		ca. 44/44s

* Dimensions refer to drive-through clearance BH = 2780mm

Schutzvermerk beachten nach DIN ISO 16016	Maßstab 1:50		Materialnummer 1406318	Revision 02	
	Konfigurationstyp		Dokumenttyp	Änderungsnr. 101143	Büro 300
MAHA GROUP	Benennung **MA STAR 6.5 wide - Product Datasheet**				
	Dokumentnummer **F4799**		Version **C**	A3	Blatt 1 / von 3
Datum, Ersteller 1.9.2022 MKRAUS	Datum, Prüfer 01.09.2022 MKRAUS	Datum, Freigabe 01.09.2022 MKRAUS	alte Materialnummer		

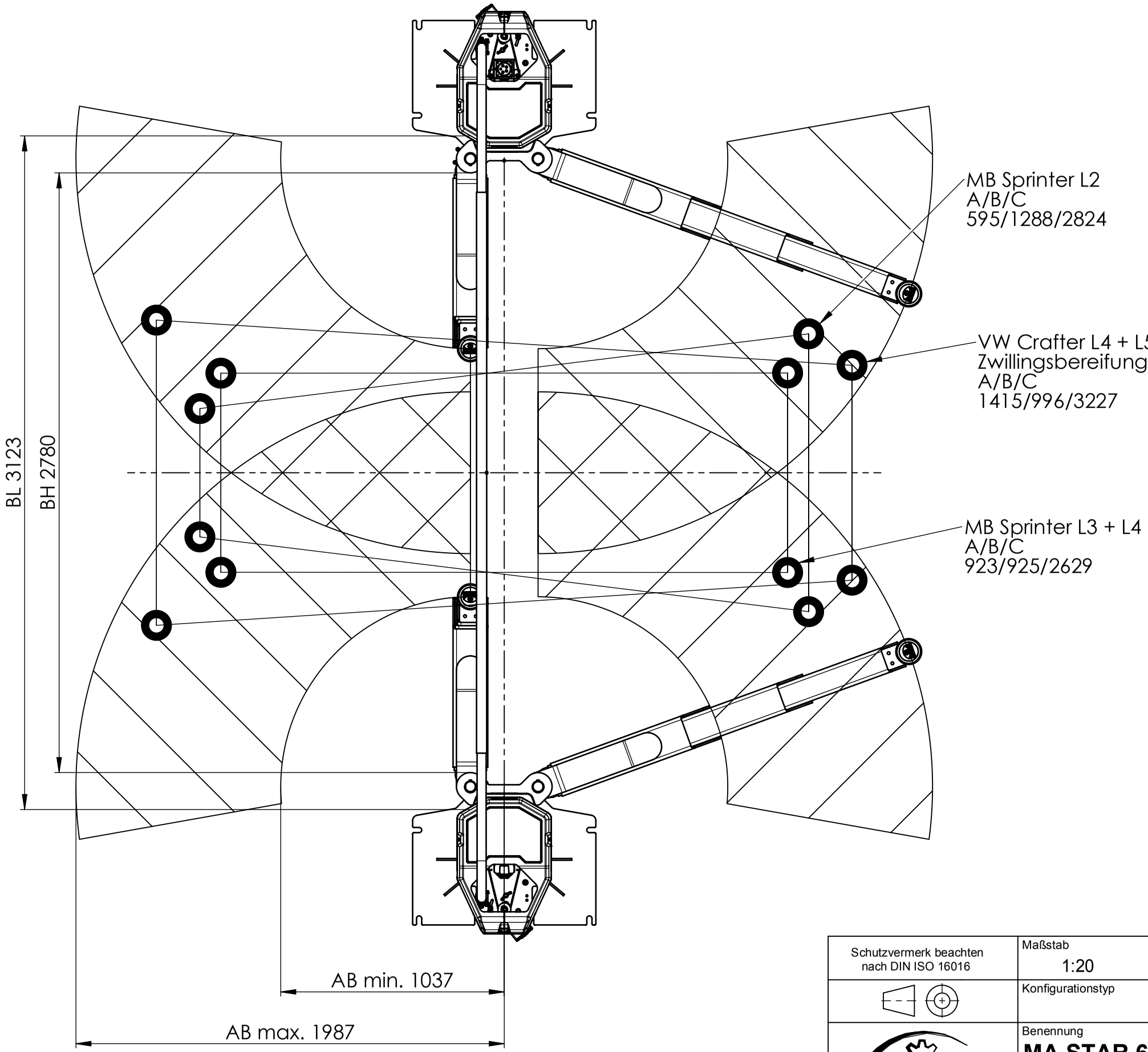

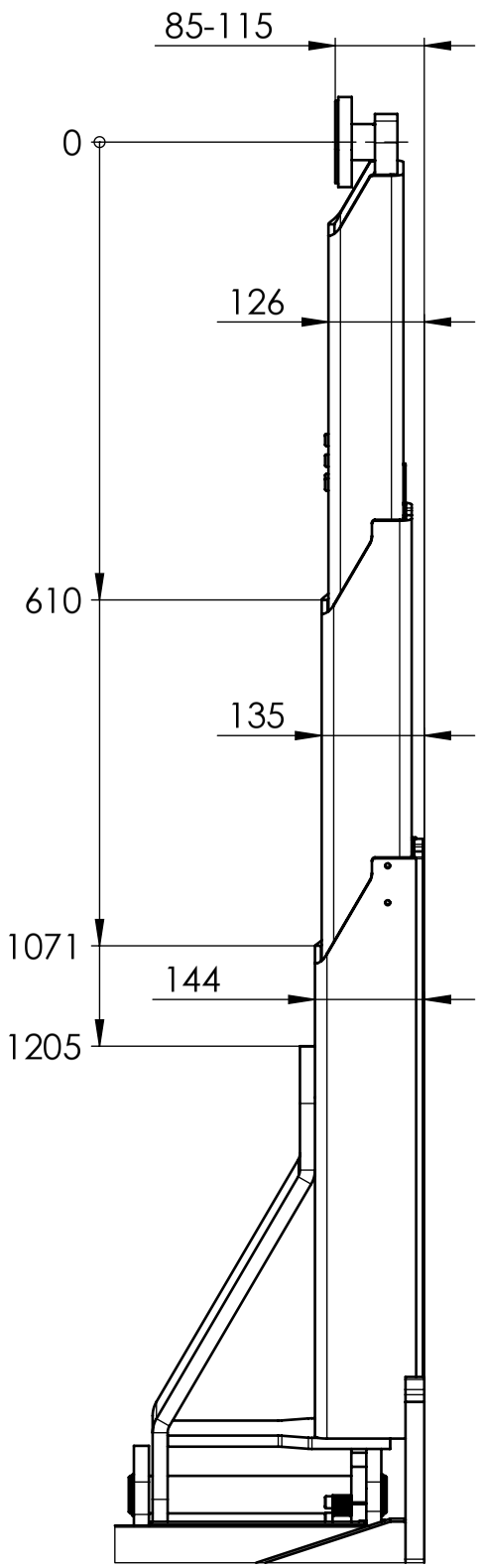

Schutzvermerk beachten nach DIN ISO 16016	Maßstab 1:20	Materialnummer 1406318	Revision 01
	Konfigurationstyp	Dokumenttyp	Änderungsnr. 101105 / Büro 300
MAHAGROUP	Benennung **MA STAR 6.5 - Aufnahmebereich / support range**		
	Dokumentnummer **F4799 breit / wide**	Version **A** / A3	Blatt 2 / von 3
Datum, Ersteller 30.11.2021 DNANFACK	Datum, Prüfer 01.12.2021 MKRAUS	Datum, Freigabe 01.12.2021 DNANFACK	alte Materialnummer

SWG/10031768/DE/A

MAHA DNANFACK 02.12.2021 08:03:31

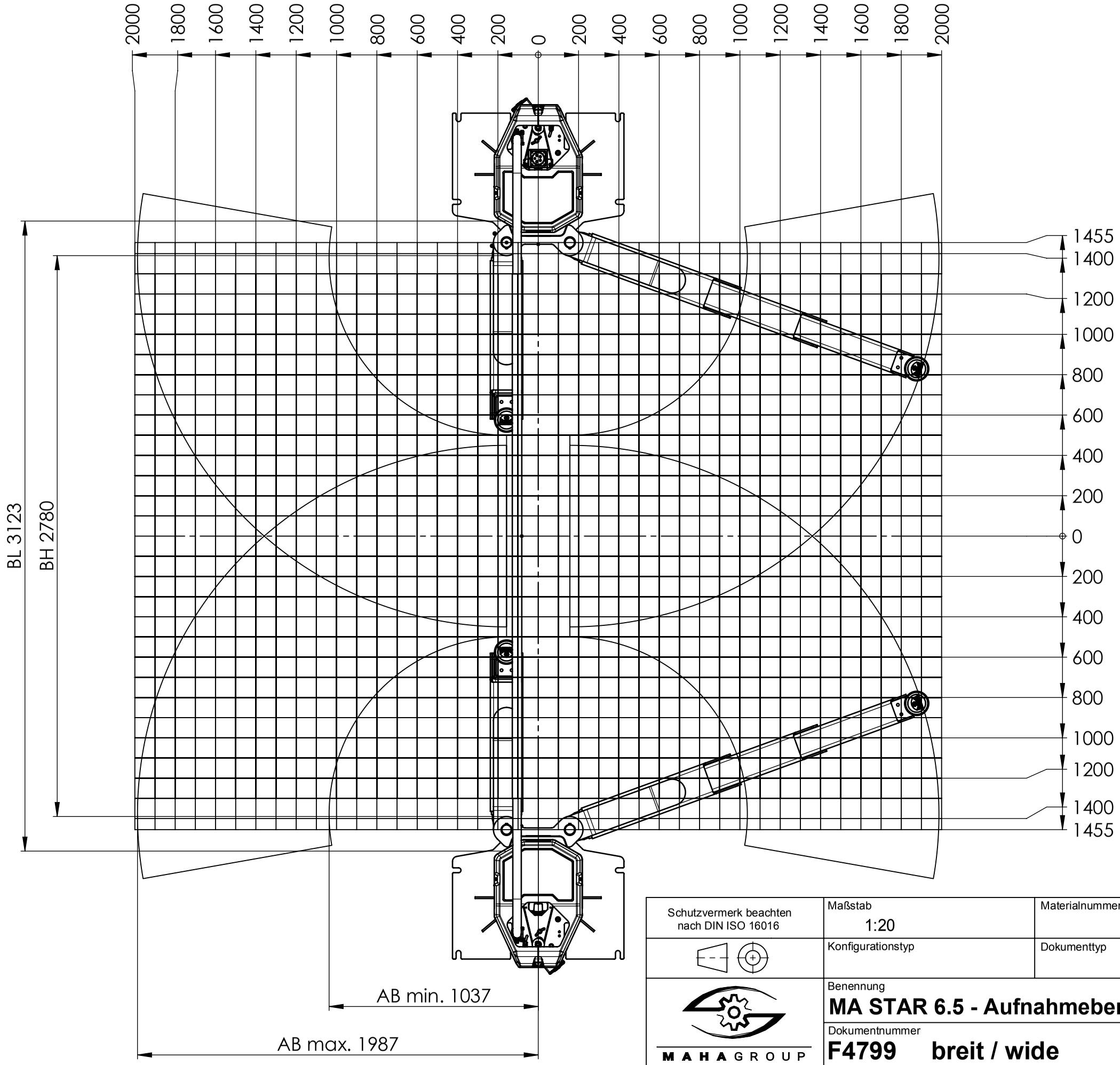

Schutzvermerk beachten nach DIN ISO 16016	Maßstab 1:20	Materialnummer 1406318	Revision 01
	Konfigurationstyp	Dokumenttyp	Änderungsnr. 101105 / Büro 300
MAHAGROUP	Benennung **MA STAR 6.5 - Aufnahmebereich / support range**		
	Dokumentnummer **F4799 breit / wide**	Version **A** A3	Blatt 3 von 3
Datum, Ersteller 30.11.2021 DNANFACK	Datum, Prüfer 01.12.2021 MKRAUS	Datum, Freigabe 01.12.2021 DNANFACK	alte Materialnummer

SWG/10031768/DE/A

MAHA DNANFACK 02.12.2021 08:03:31

MA STAR triple safety *****

MA STAR 6.5 (VP 451189 / VP 451190)

Attention:
The quality of the foundation plate has to be checked by the client prior to installation!

All dimension in m
All dimensions have to be checked on site
In case of ductwork, use max. 45° bends

Supply line in-ground	Supply line via ceiling
Install ductwork for cables Ø50mm, Insert the cable with an overlap of approx. 4m. Place the cable at the right column!	Place the cable at the right column. Connection by CEE-plug device 32A 5p 6h. Must be prepared and certified beforehand!

Attention:
All highlighted dimensions refer to the recommended drive through clearance of 2,78m! (see technical datasheet)

Supply line:
3x400V +N +PE; C32A + RCD (30mA); rated power 2x4,0kW
min. cross-sectional area of supply line 5x2,5 mm2

Connection of columns left-right via cable brigde prepared for optional in-ground wiring

The electrical connection of the Energy-Kit must be prepard on site.
Connection by Schuko plug device (1x230V, 16A + RCD(30mA)) at the corresponding column.
The power line and plug device must be prepared and certified beforehand!
In case of compressed air supply, a pneumatic hose Ø9mm has to be placed at the corresponding column (air supply 8bar).

The locally applicable regulations and standards must be fullfilled for all electrical installations!

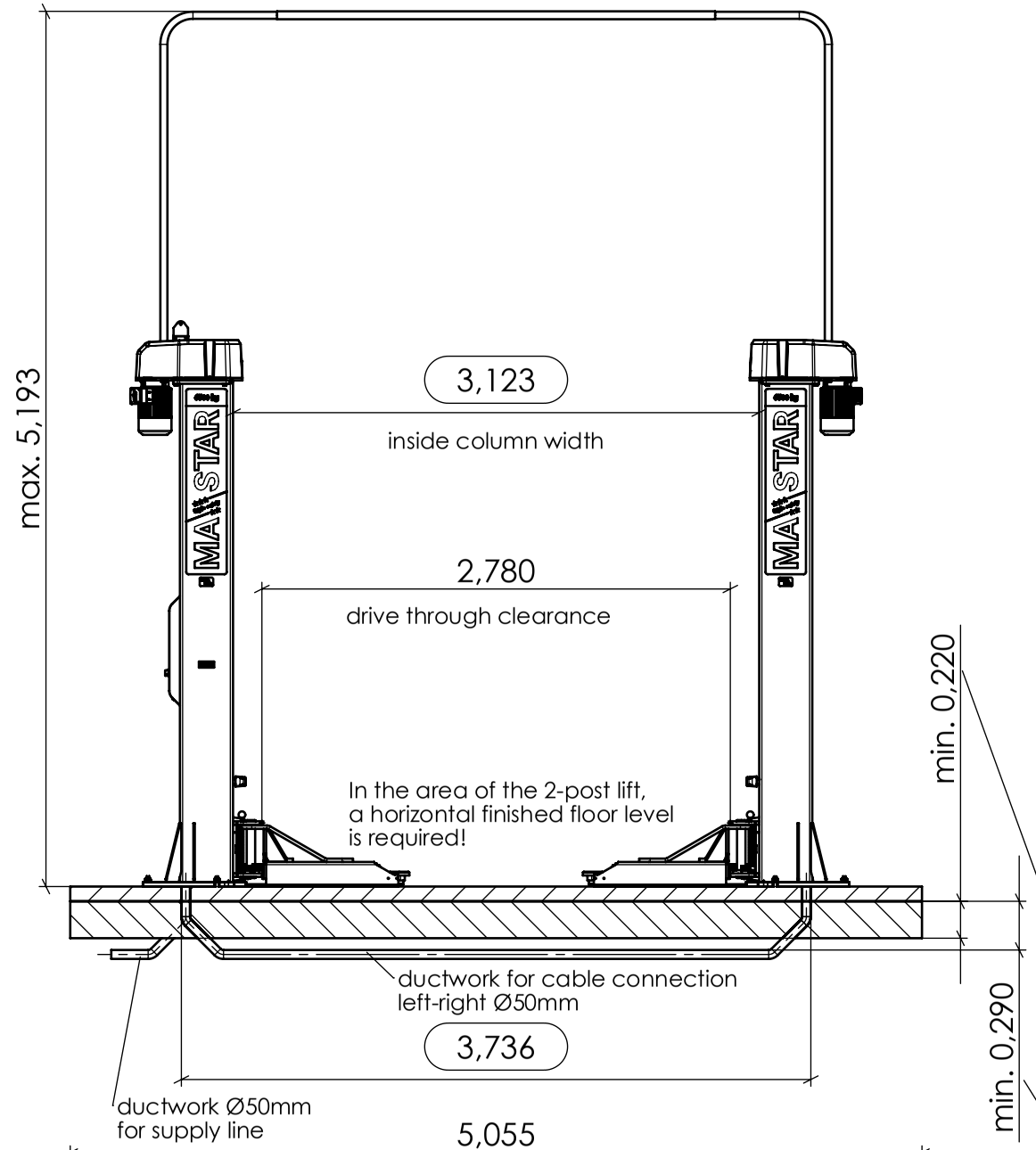

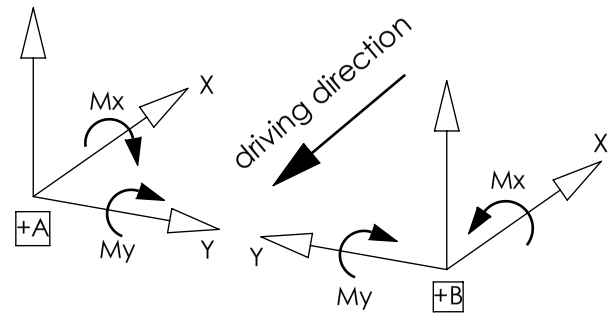

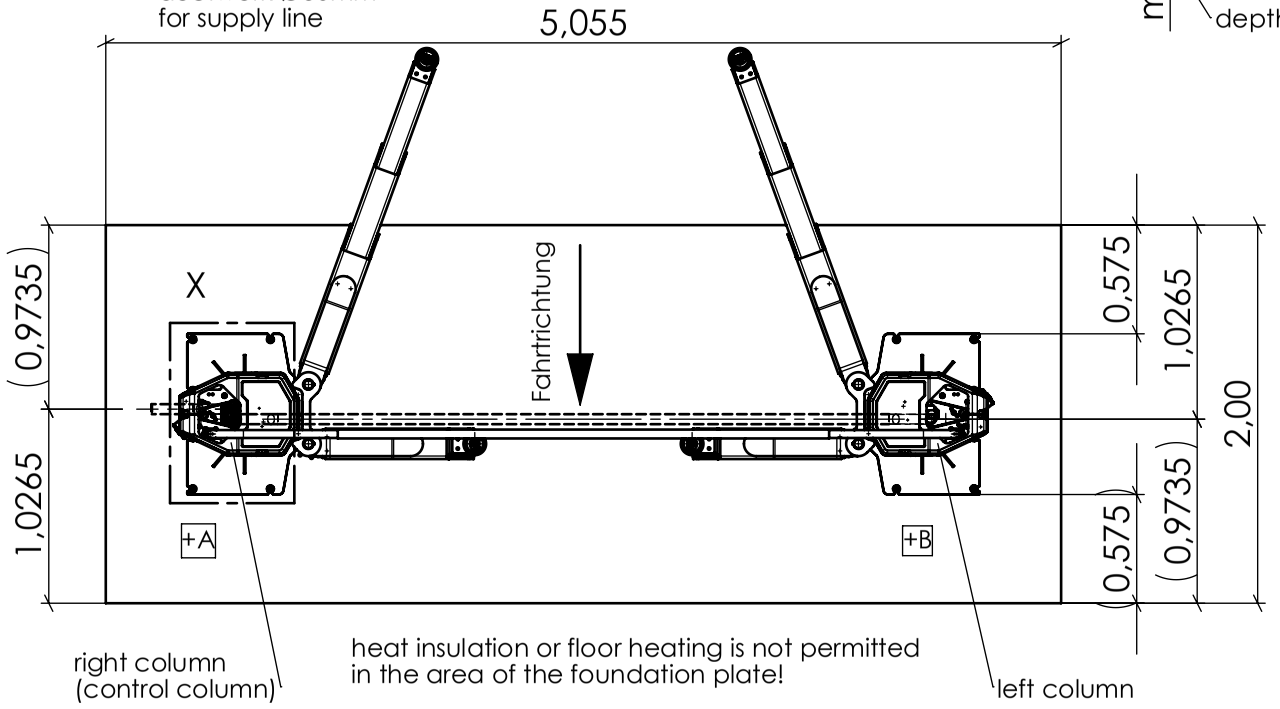

Type	max. load (N)		max. torque (Nm) per column	
	dead weight of lift (N)	rated capacity (N)	Mx	My
MA STAR 6.5	15.100	65.000	47.080	46.630

calculation of load according to EN 1493:2010 without consideration of safety factors

Detail X
1:10

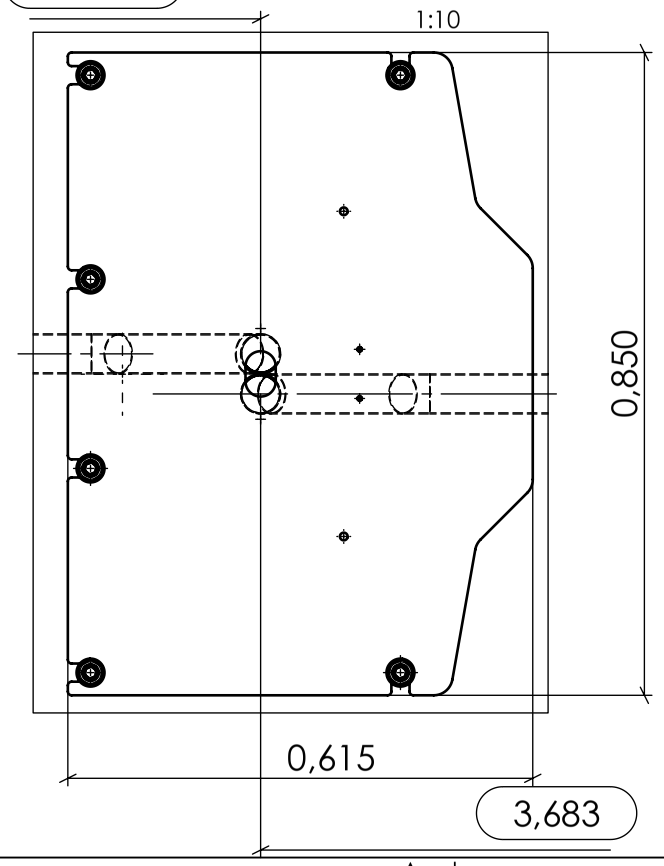

Anchorage
1:5
follow the assembly instructions!

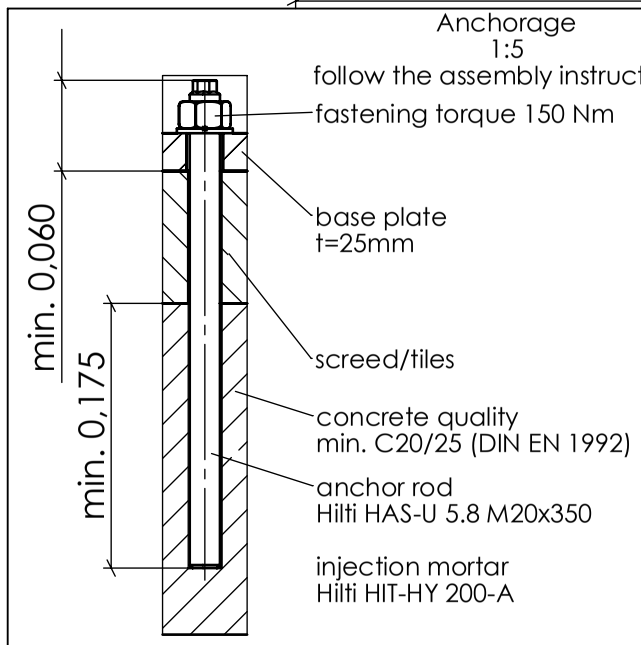

Attention:
The installation material VM 999085 is only certified for max. 100mm height of floor construction (screed/tiles)
The standard installation material can not be used for higher floor constructions!
(Please notify before installation)

Schutzvermerk beachten nach DIN ISO 16016	Maßstab 1:40	Materialnummer 1406490	Revision 01
	Konfigurationstyp Fundamentplan	Dokumenttyp Hauptzeichnung	Änderungsnr. 101222 / Büro 300
MAHA GROUP	Benennung **MA STAR 6.5 wide - foundation plan**		
	Dokumentnummer **F4800**	Version **B** / A3	Blatt 1 / von 1
Datum, Ersteller 15.12.2021 DNANFACK	Datum, Prüfer 15.12.2021 DNANFACK	Datum, Freigabe 15.12.2021 MKRAUS	alte Materialnummer

SWG/10028563/DE/B

MAHA DNANFACK 15.12.2021 16:21:32

Anchor Points

MA STAR 3.5 S
Anchor points

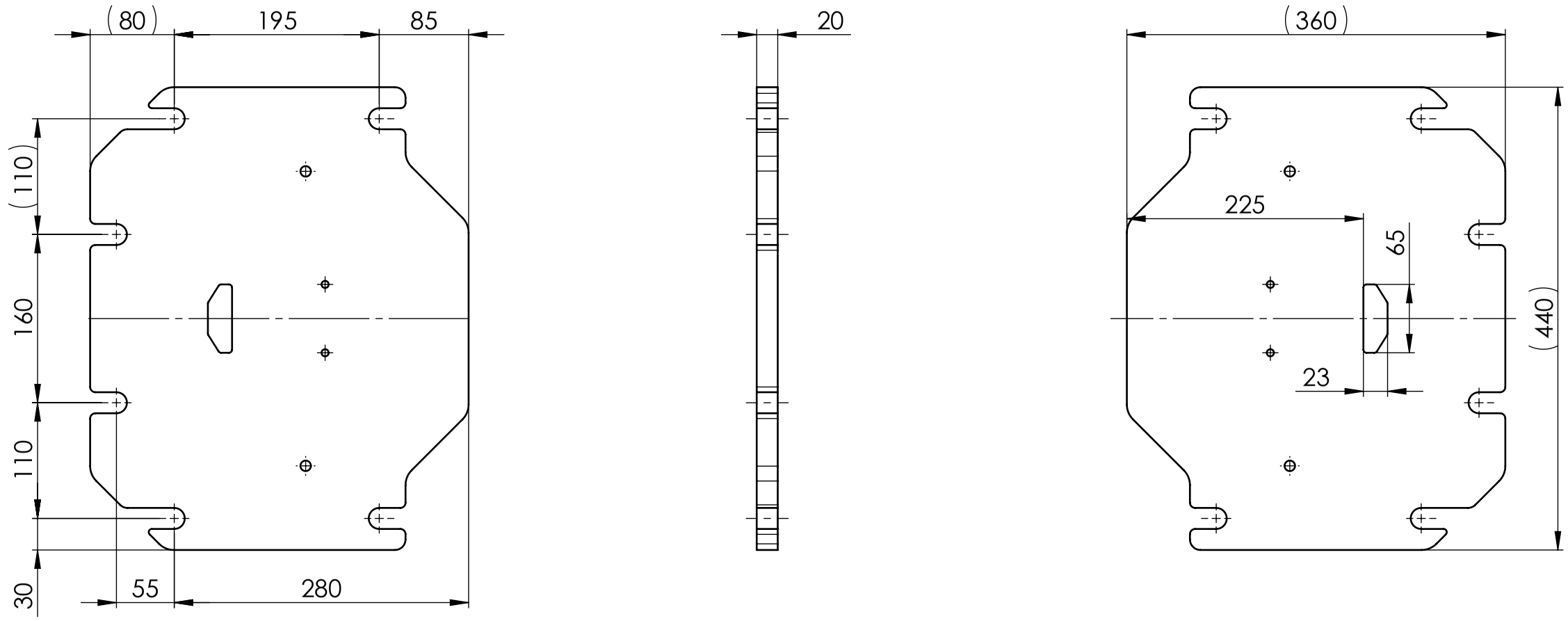

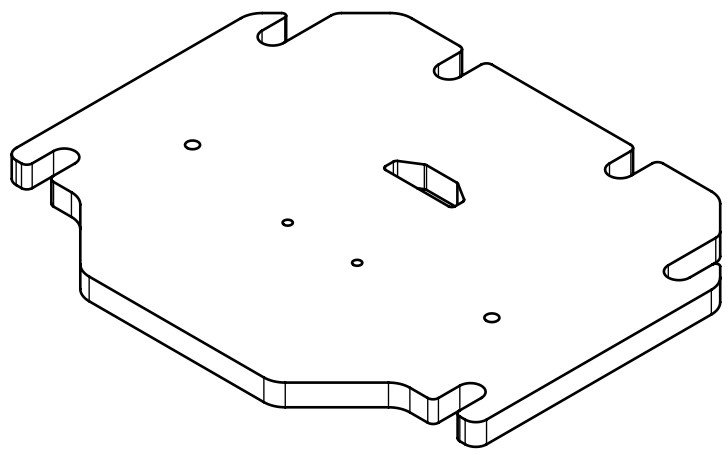

Schutzvermerk beachten nach DIN ISO 16016	Maßstab 1:5		Materialnummer 1401760	Revision 00	
	Konfigurationstyp		Dokumenttyp	Änderungsnr. 100229	Büro 300
MAHA GROUP	Benennung **Anchoring Found. MA STAR**				
	Dokumentnummer **F4780**		Version --	A3	Blatt / von
Datum, Ersteller 14.11.2019 KBRENNER	Datum, Prüfer 20.05.2021 MKRAUS	Datum, Freigabe 31.05.2021 MKRAUS	alte Materialnummer		

MA STAR 3.5 A
Anchor points

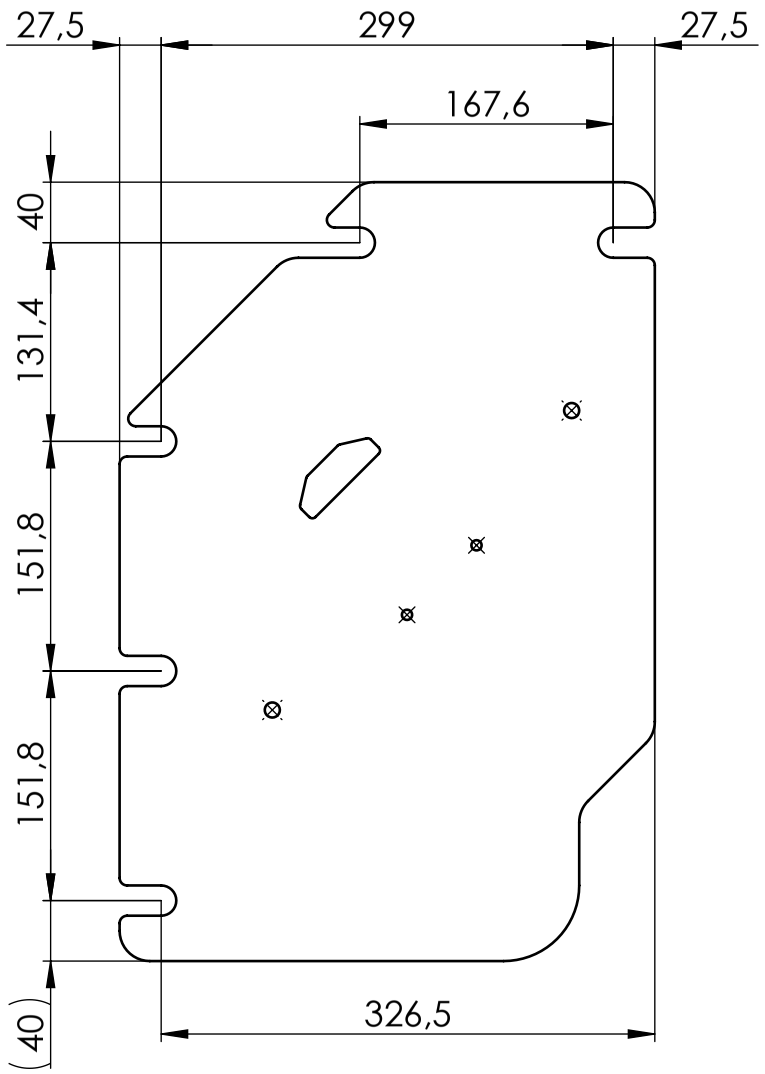

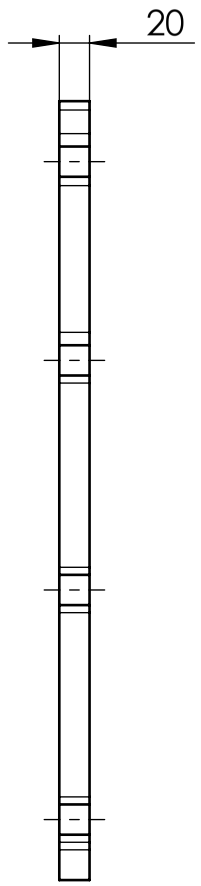

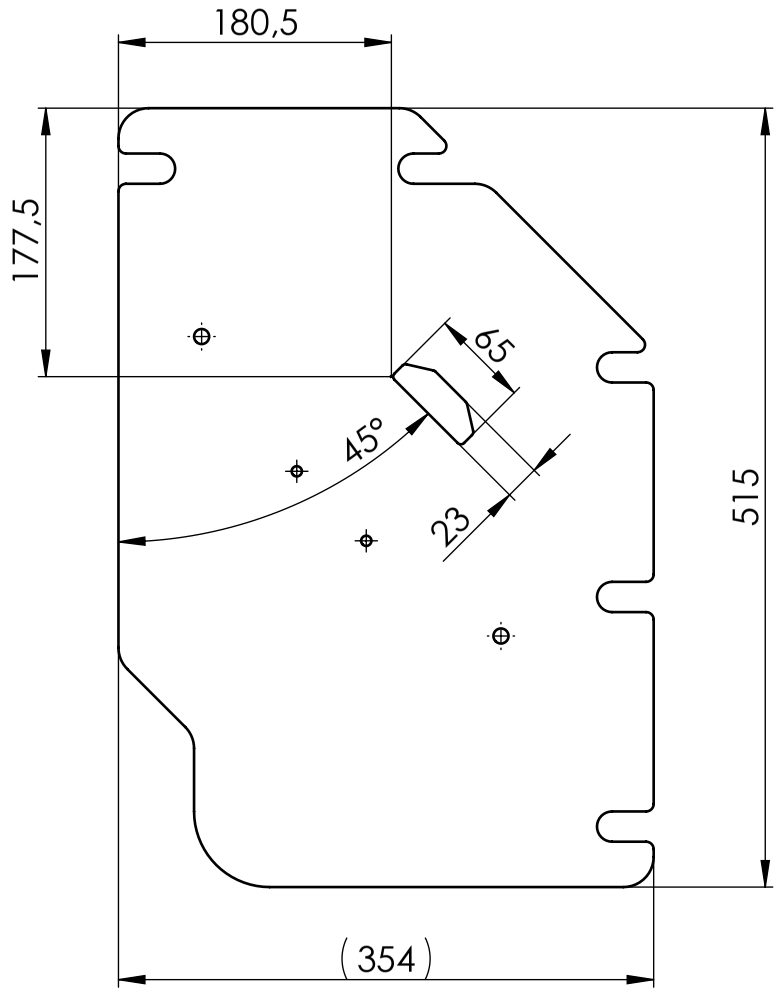

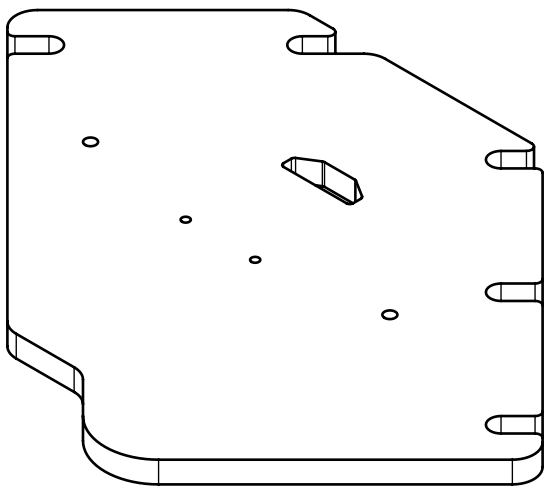

Schutzvermerk beachten nach DIN ISO 16016	Maßstab 1:5		Materialnummer 1401760	Revision 00	
	Konfigurationstyp		Dokumenttyp	Änderungsnr. 100229	Büro 300
MAHAGROUP	Benennung **Anchoring Found. MA STAR**				
	Dokumentnummer **F4781**		Version --	A3	Blatt / von
Datum, Ersteller 14.11.2019 KBRENNER	Datum, Prüfer 20.05.2021 MKRAUS	Datum, Freigabe 31.05.2021 MKRAUS	alte Materialnummer		

SWG/10009192/DE/--

MAHA MKRAUS 31.05.2021 16:06:16

MA STAR 5.5
Anchor points

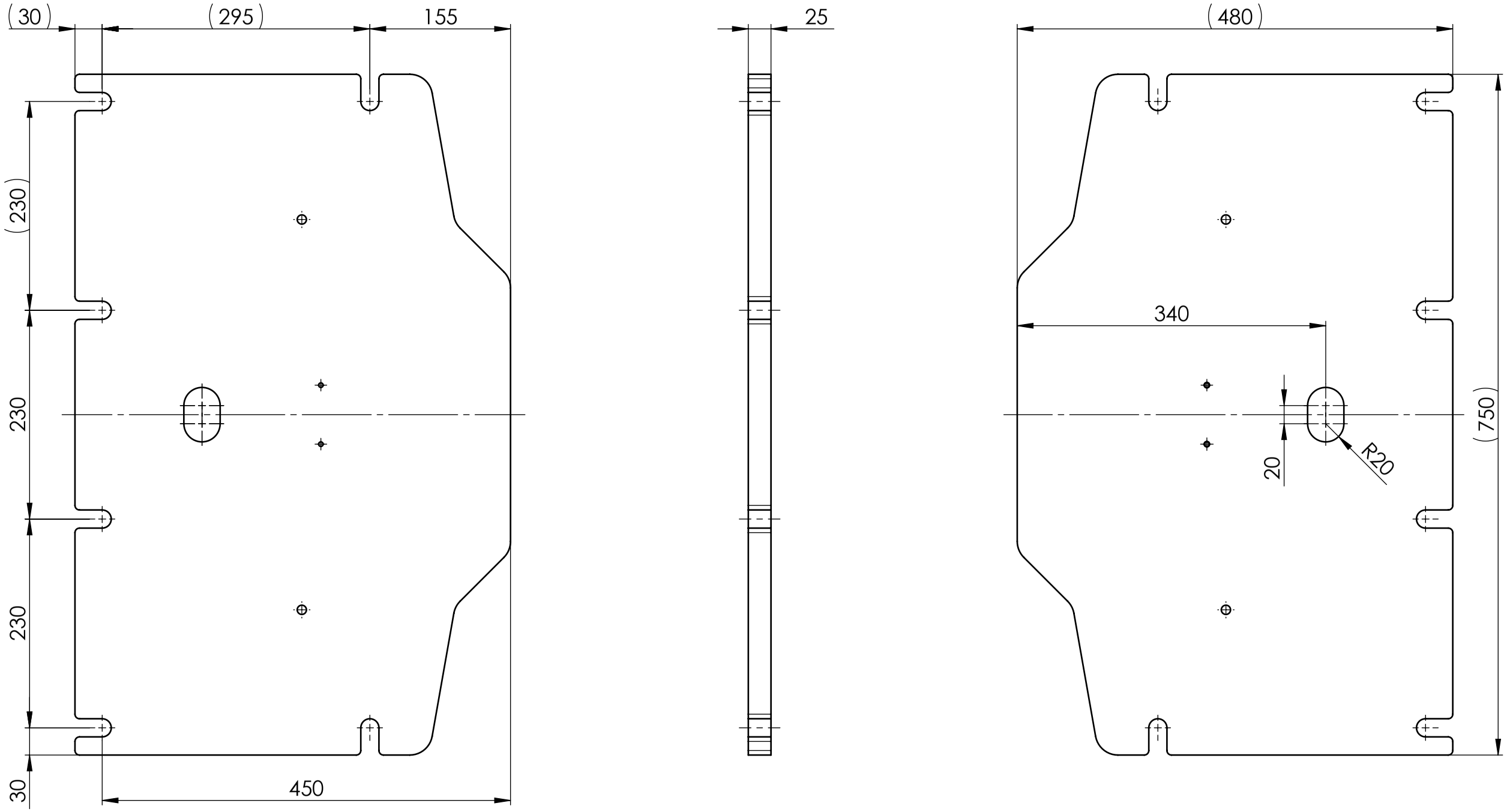

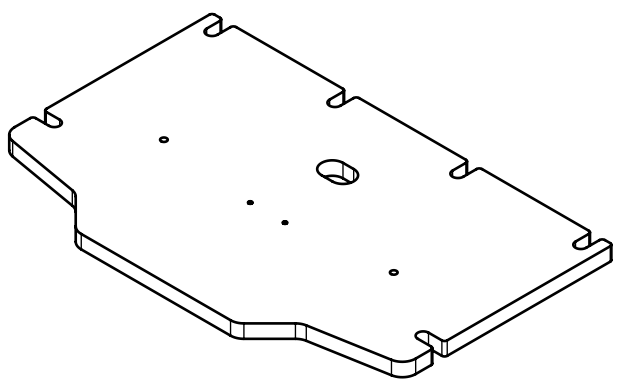

Schutzvermerk beachten nach DIN ISO 16016	Maßstab 1:5		Materialnummer 1401760	Revision 00	
	Konfigurationstyp		Dokumenttyp	Änderungsnr. 100229	Büro 300
MAHAGROUP	Benennung **Anchoring Found. MA STAR**				
	Dokumentnummer **F4796**		Version --	A3	Blatt / von
Datum, Ersteller 14.11.2019 KBRENNER	Datum, Prüfer 20.05.2021 MKRAUS	Datum, Freigabe 31.05.2021 MKRAUS	alte Materialnummer		

MA STAR 6.5
Anchor points

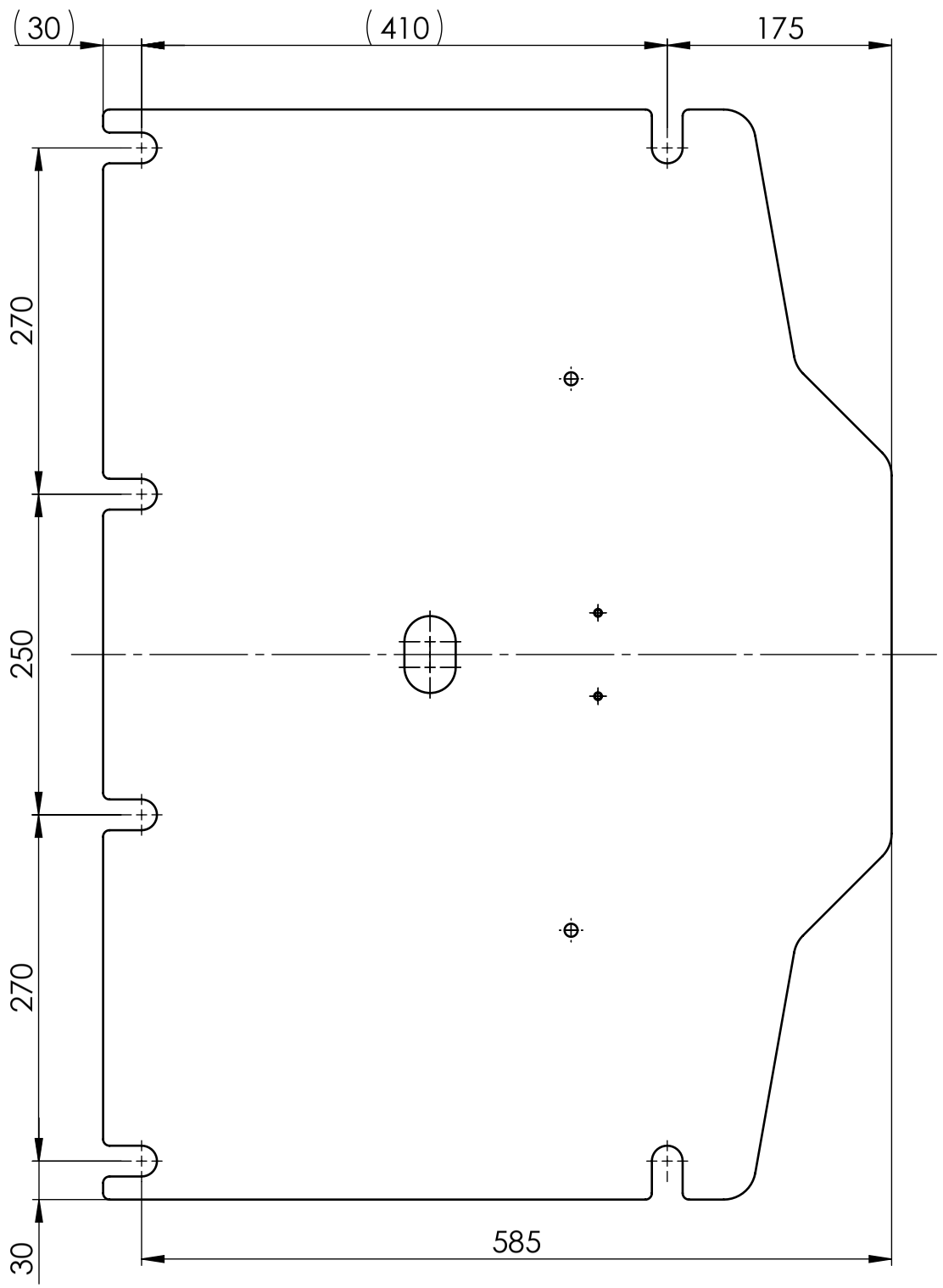

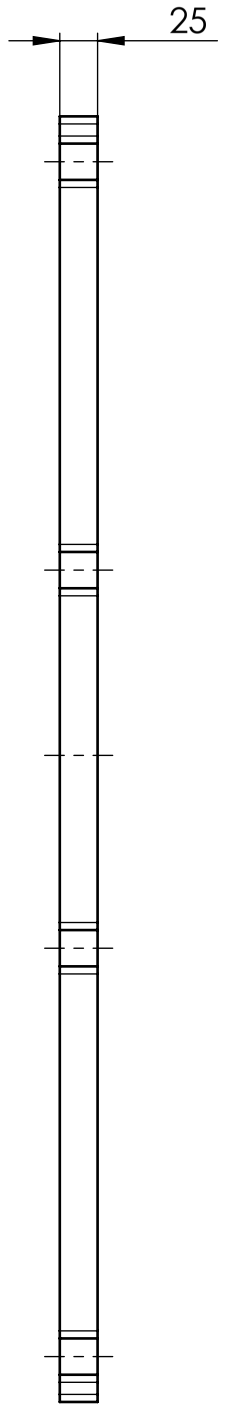

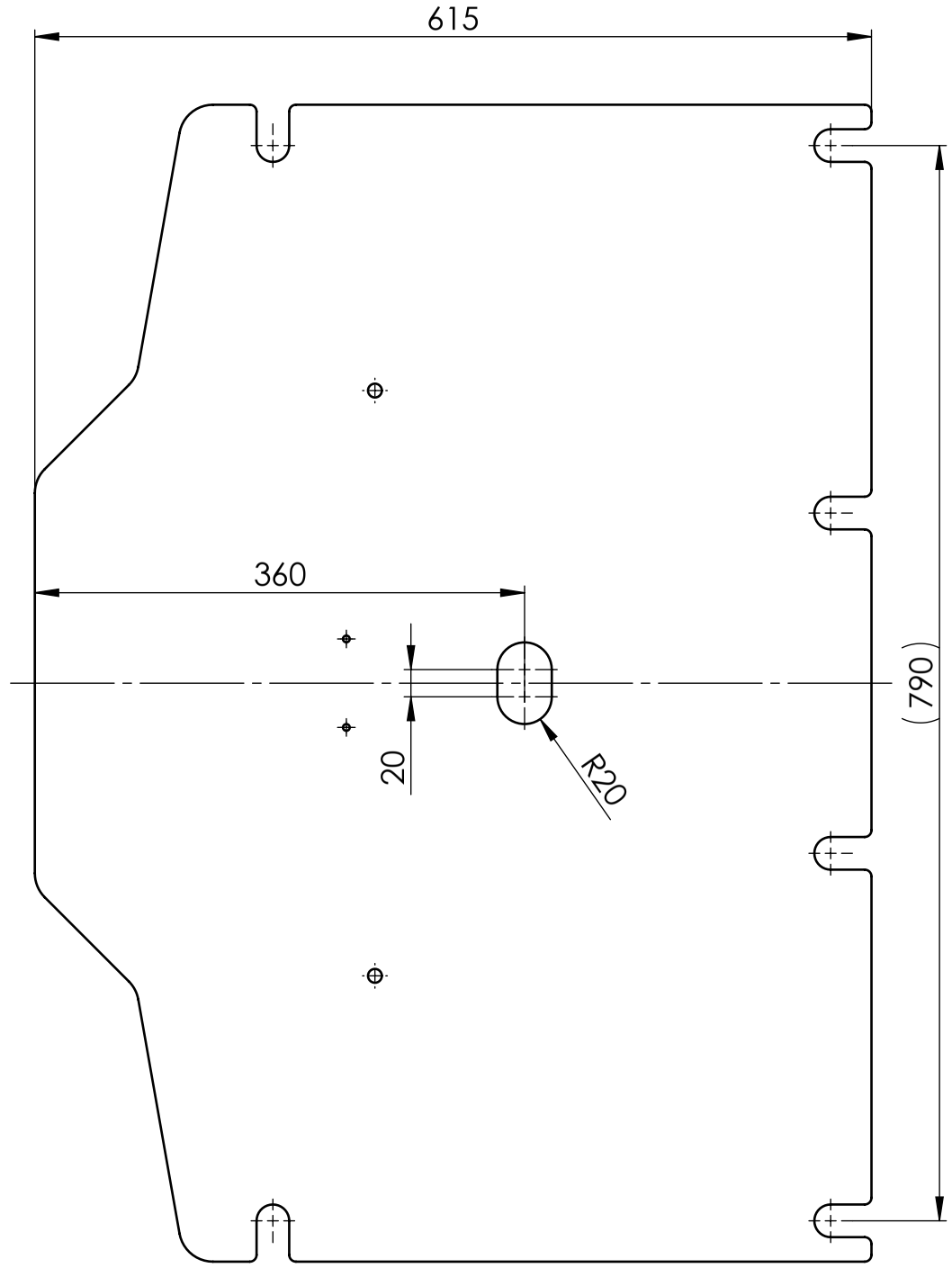

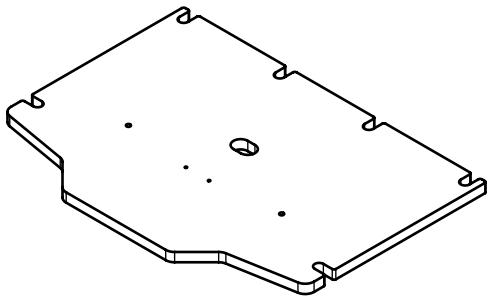

Schutzvermerk beachten nach DIN ISO 16016	Maßstab 1:5	Materialnummer 1401760	Revision 01
	Konfigurationstyp	Dokumenttyp	Änderungsnr. 100378 / Büro 300
MAHA GROUP	Benennung **Anchoring Found. MA STAR**		
	Dokumentnummer **F4801**	Version **A** / A3	Blatt / von
Datum, Ersteller 15.3.2022 DNANFACK	Datum, Prüfer 16.03.2022 DNANFACK	Datum, Freigabe 21.03.2022 MKRAUS	alte Materialnummer

Declarations of Conformity

Original EC Declaration of Conformity

CE364501-en

MAHA Maschinenbau Haldenwang GmbH & Co. KG
herewith declares as a manufacturer its sole responsibility to ensure that the product named hereafter meets the safety and health regulations both in design and construction required by the directives stated below.
This declaration becomes void if any change is made to the product that was not discussed and approved by named company beforehand.

Model	**VP Number**
MA STAR 3.5 A	VP 251230 + VP 251232
MA STAR 3.5 A BMW	VP 251234
MA STAR 3.5 A MB	VP 251235
MA STAR 3.5 S	VP 251231 + VP 251233

Designation
Two Post Lift
Rated Load Capacity: 3500 kg

Directives
2006/42/EC
2014/30/EU

Standards
DIN EN 1493:2010
DIN EN 60204-1
DIN EN ISO 13849-1

Person Authorised to Compile the Technical File
Ralf Kerkmeier
MAHA Maschinenbau Haldenwang GmbH & Co. KG, Hoyen 20, 87490 Haldenwang, Germany

Haldenwang, 2022-09-30

Andreas Maier
Authorised CE Representative

Original EC Declaration of Conformity

CE364601-en

MAHA Maschinenbau Haldenwang GmbH & Co. KG
herewith declares as a manufacturer its sole responsibility to ensure that the product named hereafter meets the safety and health regulations both in design and construction required by the directives stated below.
This declaration becomes void if any change is made to the product that was not discussed and approved by named company beforehand.

Model	**VP Number**
MA STAR 5.5	VP 451186 + VP 451187
MA STAR 5.5 MB	VP 451188

Designation
Two Post Lift
Rated Load Capacity: 5500 kg

Directives
2006/42/EC
2014/30/EU

Standards
DIN EN 1493:2010
DIN EN 60204-1
DIN EN ISO 13849-1

Person Authorised to Compile the Technical File
Ralf Kerkmeier
MAHA Maschinenbau Haldenwang GmbH & Co. KG, Hoyen 20, 87490 Haldenwang, Germany

Haldenwang, 2022-09-30

Andreas Maier
Authorised CE Representative

Original EC Declaration of Conformity

CE364701-en

MAHA Maschinenbau Haldenwang GmbH & Co. KG
herewith declares as a manufacturer its sole responsibility to ensure that the product named hereafter meets the safety and health regulations both in design and construction required by the directives stated below.
This declaration becomes void if any change is made to the product that was not discussed and approved by named company beforehand.

Model	**VP Number**
MA STAR 6.5	VP 451189 + VP 451190

Designation
Two Post Lift
Rated Load Capacity: 6500 kg

Directives
2006/42/EC
2014/30/EU

Standards
DIN EN 1493:2010
DIN EN 60204-1
DIN EN ISO 13849-1

Person Authorised to Compile the Technical File
Ralf Kerkmeier
MAHA Maschinenbau Haldenwang GmbH & Co. KG, Hoyen 20, 87490 Haldenwang, Germany

Haldenwang, 2022-09-30

Andreas Maier
Authorised CE Representative

MAHA MASCHINENBAU HALDENWANG GMBH & CO. KG

Hoyen 20
87490 Haldenwang
Germany

+49 8374 585 0
maha@maha.de
maha.de